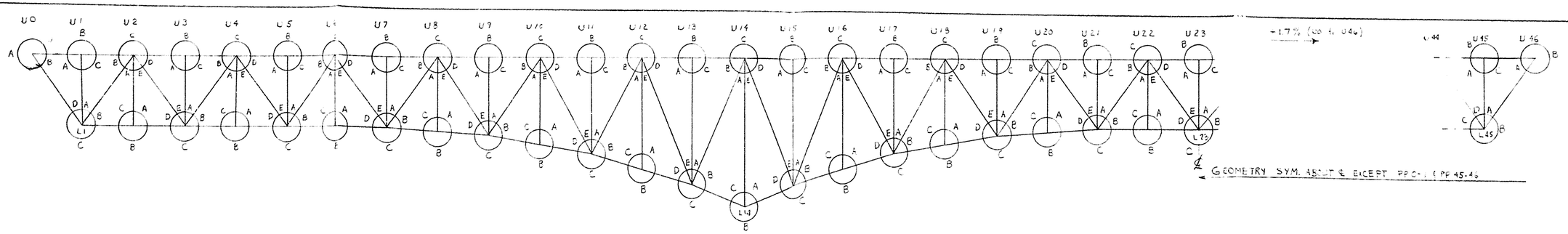

	MEMBER	GEOM LENGTH (FT)	CAMBER AREA (SQ IN)	D.L. STRESS (KIPS)	CAMBER (FT)	GEOM LENGTH + CAMBER	FAB LENGTH (FT)
TOP CHORDS	U0 U1	28.6212	94.63	- 137.36	0.0070	28.6282	28'-7 7/8
	U1 U2	30.0043	94.63	- 133.86	0.0073	30.0116	30'-0 1/8
	U2 U3		116.00	- 1685.71	0.0137	30.0193	30'-0 3/16
	U3 U4		116.00	-1689.25	0.0137	30.0180	30'-0 3/16
	U4 U5		137.12	- 1895.03	0.0130	30.0173	30'-0 3/16
	U5 U6		137.12	- 1891.45	0.0130	30.0173	30'-0 1/16
	U6 U7		116.00	- 1369.39	0.0111	30.0154	30'-0 1/16
	U7 U8		116.00	- 1365.85	0.0111	30.0154	30'-0 1/16
	U8 U9		94.63	- 94.55	0.0009	30.0052	30'-0 1/16
	U9 U10		94.63	- 91.09	0.0009	30.0052	30'-0 1/16
	U10 U11		86.94	1444.91	- 0.0156	29.9857	29'-11 7/8
	U11 U12		86.94	1441.37	- 0.0156	29.9857	29'-11 7/8
	U12 U13		137.12	2633.22	- 0.0181	29.9862	29'-11 27/32
	U13 U14		137.12	2629.48	- 0.0180	29.9863	29'-11 27/32
	U14 U15		137.12	2688.88	- 0.0184	29.9857	29'-11 27/32
	U15 U16		137.12	2692.62	- 0.0185	29.9860	29'-11 27/32
	U16 U17		94.63	1664.51	- 0.0165	29.9878	29'-11 29/32
	U17 U18		94.63	1668.09	- 0.0166	29.9877	29'-11 29/32
	U18 U19		96.74	401.69	- 0.0043	30.0000	30'-0
	U19 U20		86.94	405.19	- 0.0044	29.9999	30'-0
	U20 U21		94.63	- 671.41	0.0067	30.0110	30'-0 1/8
	U21 U22		94.63	- 674.91	0.0067	30.0110	30'-0 1/8
	U22 U23	↓	94.63	- 1023.58	0.0102	30.0145	30'-0 3/16
	U44 U45	30.0043	94.63	- 760.16	0.0076	30.0119	30'-0 5/32
	U45 U46	31.3804	94.63	- 756.66	0.0079	31.3883	31'-4 3/32
BOTTOM CHORDS	L1 L2	30.0043	86.94	1324.15	- 0.0143	29.9900	29'-11 7/8
	L2 L3	30.0043	86.94	1323.83	- 0.0143	29.9900	29'-11 7/8
	L3 L4	30.0043	110.00	1879.24	- 0.0161	29.9882	29'-11 13/16
	L4 L5	30.0043	110.00	1878.87	- 0.0161	29.9882	29'-11 13/16
	L5 L6	30.0043	110.00	1727.15	- 0.0148	29.9895	29'-11 7/8
	L6 L7	30.0043	110.00	1727.52	- 0.0148	29.9875	29'-11 7/8
	L7 L8	30.0553	86.94	808.37	- 0.0088	30.0465	30'-0 9/16
	L8 L9	30.0553	86.94	808.71	- 0.0088	30.0465	30'-0 9/16
	L9 L10	30.4893	94.63	- 733.80	0.0074	30.4967	30'-5 3/16
	L10 L11	30.4893	94.63	- 734.15	0.0074	30.4967	30'-5 3/16
	L11 L12	31.3250	137.12	- 2181.74	0.0156	31.3406	31'-4 3/16
	L12 L13	31.3250	137.12	- 2182.22	0.0156	31.3406	31'-4 3/16
	L13 L14	32.1927	240.50	- 3354.35	0.0141	32.2068	32'-2 15/16
	L14 L15	32.1927	240.50	- 3356.67	0.0141	32.2068	32'-2 15/16
	L15 L16	31.3250	167.38	- 2319.98	0.0136	31.3386	31'-4 1/16
	L16 L17	31.3250	167.38	- 2319.42	0.0136	31.3386	31'-4 1/16
	L17 L18	30.4893	94.63	- 1066.53	0.0108	30.5001	30'-6
	L18 L19	30.4893	94.63	- 1066.17	0.0108	30.5001	30'-6
	L19 L20	30.0553	86.94	230.61	- 0.0025	30.0528	30'-0 5/16
	L20 L21	30.0553	86.94	230.27	- 0.0025	30.0528	30'-0 5/16
	L44 L45	30.0043	94.63	940.49	- 0.0093	29.9950	29'-11 15/16
	L45 L46	30.0043	94.63	940.15	- 0.0093	29.9950	29'-11 15/16

	MEMBER	GEOM LENGTH (FT)	CAMBER AREA (SQ IN)	D.L. STRESS (KIPS)	CAMBER (FT)	GEOM LENGTH + CAMBER	FAB LENGTH (FT)
DIAGONALS	U0 L1	41.1897	86.94	1237.51	- 0.0219	41.1678	41'-1 1/2
	L1 U2	50.0026	88.12	- 944.64	0.0167	50.0193	50'-0 1/32
	U2 L3	50.0026	51.92	542.64	- 0.0194	49.9832	49'-11 13/16
	L3 U4	50.0026	51.92	- 335.17	0.0101	50.0127	50'-0 3/32
	U4 L5	50.0026	51.92	31.11	- 0.0009	50.0017	50'-0 1/32
	L5 U6	50.0026	42.31	305.71	- 0.0113	49.9913	49'-11 7/8
	U6 L7	50.0026	44.00	- 609.16	0.0195	50.0171	50'-0 3/32
	L7 U8	50.0026	42.00	972.82	- 0.0246	49.9780	49'-11 3/4
	U8 L9	52.8442	104.13	- 1247.17	0.0198	52.8640	52'-10 3/8
	L9 U10	52.8442	74.05	1339.78	- 0.0300	52.8142	52'-9 3/4
	U10 L11	62.0674	111.00	- 1546.63	0.0271	62.0945	62'-1 1/8
	L11 U12	62.0674	74.05	1294.34	- 0.0337	62.0337	62'-0 13/32
	U12 L13	78.3094	124.06	- 1511.38	0.0299	78.3393	78'-4 1/16
	L13 U14	78.3094	74.05	1205.07	- 0.0397	78.2697	78'-3 1/4
	U14 L15	78.3094	66.00	1059.98	- 0.0374	78.2720	78'-3 1/4
	L15 U16	78.3094	111.00	- 1326.02	0.0293	78.3387	78'-4 1/16
	U16 L17	62.0674	66.00	1087.35	- 0.0321	62.0353	62'-0 1/16
	L17 U18	62.0674	106.00	- 1327.00	0.0244	62.0918	62'-1 3/32
	U18 L19	52.8442	66.00	1107.46	- 0.0278	52.8164	52'-9 13/16
	L19 U20	52.8442	97.35	- 1049.37	0.0179	52.8621	52'-10 11/32
	U20 L21	50.0026	61.00	778.16	- 0.0200	49.9826	49'-11 13/32
	L21 U22	50.0026	61.00	- 462.39	0.0119	50.0145	50'-0 5/32
	U22 L23	50.0026	51.92	165.88	- 0.0050	49.9976	49'-11 31/32
	L45 U46	50.8402	86.94	12.53.04	- 0.0230	50.8172	50'-9 3/4
VERTICALS	U0 L1	40.0000	39.31	- 205.76	0.0066	40.0066	40'-0 3/32
	U2 L2	40.0000	19.38	19.17	- 0.0012	39.9988	39'-11 27/32
	U3 L3	40.0000	39.31	- 208.20	0.0066	40.0066	40'-0 3/32
	U4 L4	40.0000	19.38	22.17	- 0.0014	39.9986	39'-11 27/32
	U5 L5	40.0000	39.31	- 210.59	0.0067	40.0067	40'-0 3/32
	U6 L6	40.0000	19.38	21.65	- 0.0014	39.9986	39'-11 27/32
	U7 L7	40.0000	39.31	- 208.28	0.0066	40.0066	40'-0 3/32
	U8 L8	41.7530	19.38	19.93	- 0.0013	41.7487	41'-9
	U8 L9	43.5000	42.31	- 206.41	0.0067	43.5067	43'-6 1/16
	U10 L10	48.9167	24.50	20.59	- 0.0013	48.9154	48'-11
	U11 L11	54.3333	50.00	- 207.77	0.0071	54.3404	54'-4 1/16
	U12 L12	63.3333	31.13	27.31	- 0.0017	63.3316	63'-3 15/16
	U13 L13	72.3333	63.00	- 220.21	0.0079	72.3412	72'-4 3/16
	U14 L14	84.0000	161.00	- 2367.67	0.0387	84.0387	84'-0 15/16
	U15 L15	72.3333	63.00	- 220.23	0.0079	72.3412	72'-4 3/16
	U16 L16	63.3333	31.13	31.22	- 0.0020	63.3313	63'-3 15/16
	U17 L17	54.3333	50.00	- 210.10	0.0072	54.3405	54'-4 3/16
	U18 L18	48.9167	24.50	20.89	- 0.0013	48.9154	48'-11
	U19 L19	43.5000	42.31	205.58	0.0066	43.5066	43'-6 3/16
	U20 L20	41.7500	19.38	18.71	- 0.0013	41.7487	41'-9
	U21 L21	40.0000	39.31	- 205.96	0.0066	40.0066	40'-0 3/32
	U22 L22	40.0000	19.38	19.13	- 0.0013	39.9987	40'-0
	U23 L23	40.0000	39.31	- 207.07	0.0066	40.0066	40'-0 3/32

PANEL POINTS	GEOMETRIC ANGLES				
	A	B	C	D	E
TOP CHORD	U0	305 5725	54.4035			
	U1	90.0000	180.0000	90.0000		
	U2	36.8738	53.1262	180.0000	53.1262	36.8738
	U3	90.0000	180.0000	90.0000		
	U4	36.8738	53.1262	180.0000	53.1262	36.8738
	U5	90.0000	180.0000	90.0000		
	U6	36.8738	53.1262	180.0000	53.1262	36.8738
	U7	90.0000	180.0000	90.0000		
	U8	36.8738	53.1262	180.0000	55.4038	34.5962
	U9	90.0000	180.0000	90.0000		
	U10	34.5961	55.4039	180.0000	61.0913	28.9087
	U11	90.0000	180.0000	90.0000		
	U12	28.9086	61.0914	180.0000	67.4710	22.5290
	U13	90.0000	180.0000	90.0000		
	U14	22.5289	67.4711	180.0000	67.4711	22.5289
	U15	90.0000	180.0000	90.0000		
	U16	22.5290	67.4710	180.0000	61.0914	28.9086
	U17	90.0000	180.0000	90.0000		
	U18	28.9087	61.0913	180.0000	55.4039	34.5961
	U19	90.0000	180.0000	90.0000		
	U20	34.5962	55.4038	180.0000	53.1262	36.8738
	U21	90.0000	180.0000	90.0000		
	U22	36.8738	53.1262	180.0000	53.1262	36.8738
	U23	90.0000	180.0000	90.0000		
	U45	90.0000	180.0000	90.0000		
	U46	51.8555	308.1145			
BOTTOM CHORD	L1	36.8738	53.1262	234.4075	35.5925	
	L2	90.0000	180.0000	90.0000		
	L3	36.8738	53.1262	180.0000	53.1262	36.8738
	L4	90.0000	180.0000	90.0000		
	L5	36.8738	53.1262	180.0000	53.1262	36.8738
	L6	90.000	180.0000	90.0000		
	L7	36.8738	56.4642	176.6620	53.1262	36.8738
	L8	93.3380	180.9000	86.6620		
	L9	34.5961	65.6372	173.1047	52.0658	34.5962
	L10	100.2333	180.0000	79.7667		
	L11	28.9086	77.7889	173.5363	50.8580	28.9087
	L12	106.6970	180.0000	73.3030		
	L13	22.5289	88.7189	175.4972	50.7740	22.5290
	L14	68.7522	222.4956	68.7522		
	L15	22.5290	50.7740	175.4972	88.7189	22.5289
	L16	73.3030	180.0000	106.6970		
	L17	28.9087	50.8580	173.5363	77.7886	28.9086
	L18	79.7667	180.0000	100.2333		
	L19	34.5962	52.0658	173.1047	65.6372	34.5961
	L20	86.6620	180.0000	93.3380		
	L21	36.8738	53.1262	176.6620	56.4642	36.8738
	L22	90.0000	180.0000	90.0000		
	L23	36.8738	53.1262	180.0000	53.1262	36.8738
	L45	38.1145	231.8855	53.1262	36.8738	

NOTES

1. Geometric lengths and angles computed from basic geometry shown on A.B.D. dwg. A2.
2. Camber areas per design dwg. 7 of 27.
3. D.L. stresses based on D.L. panel concentrations shown on A.B.D. dwg. 2.
4. Stress tabulated for members sym. about ℄ (all members except U0-U2, U44-U46, U0-L1, L45-U46) is the maximum stress for the sym. members.

Example	Computed Stress	Tabulated Stress
U13-U14	2624.70	2629.48
U33-U32 (U15-U14)	2629.48	

E = 31,900 K.S.I.

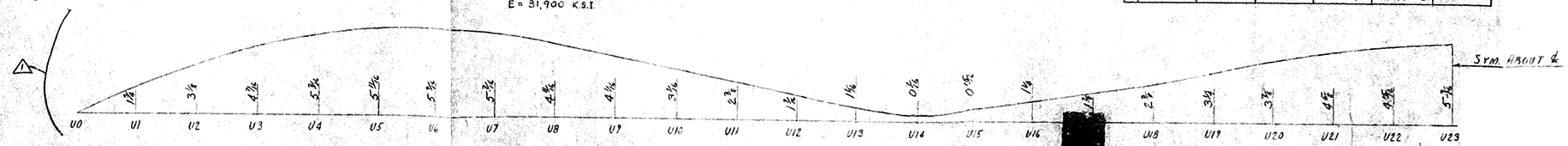

CAMBER DIAGRAM (FULL DEAD LOAD

COPYRIGHT AMERICAN BRIDGE 19 66

D 587 PAPERCLOTH Rev 264

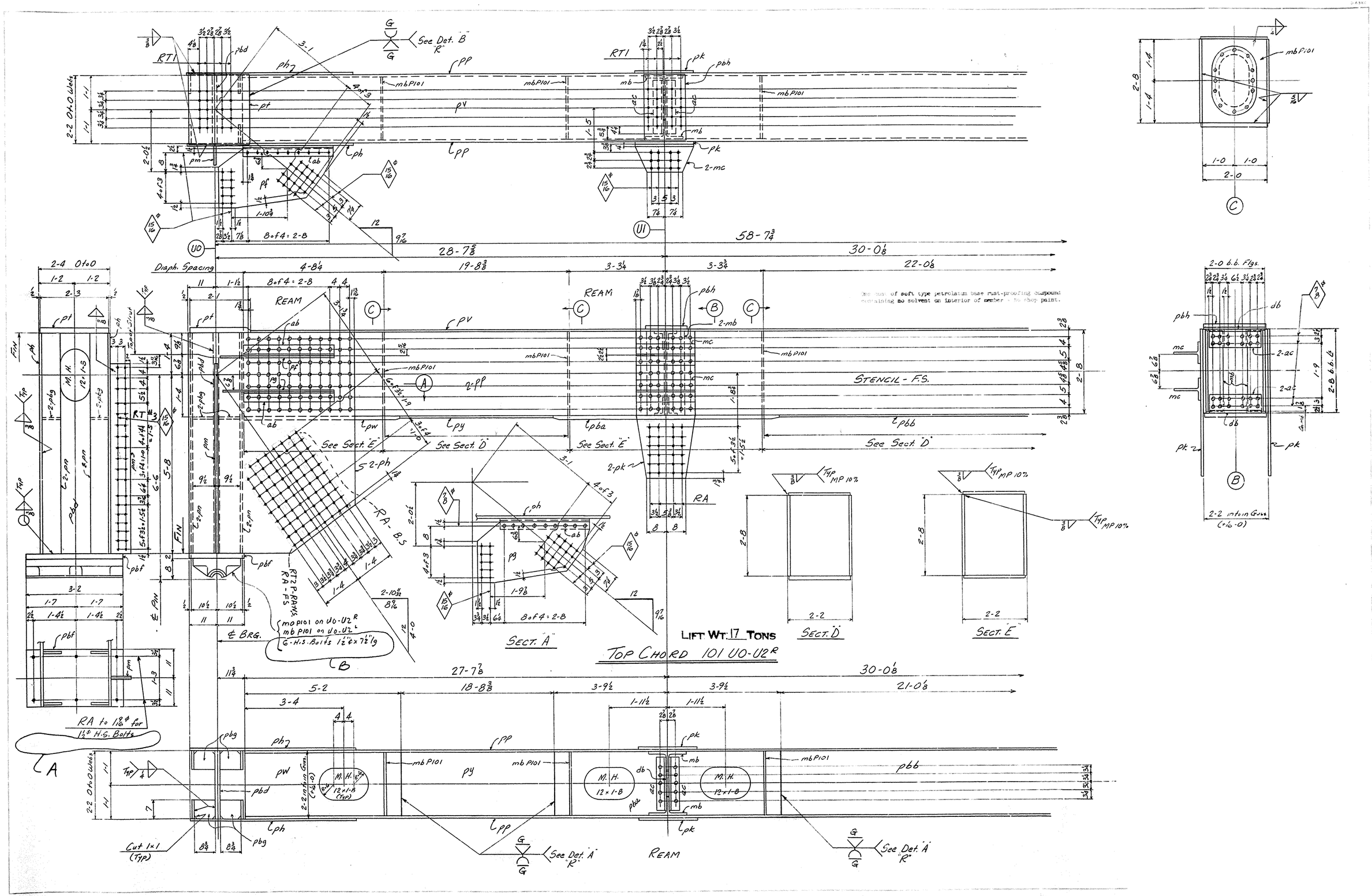

LIFT WT. 17 TONS
TOP CHORD 101 U0-U2R
SECT. "A"
SECT. "D"
SECT. "E"
STENCIL - F.S.
REAM
Diaph. Spacing
See Det. "B" "R"
See Det. "A" "R"
See Sect. "E"
See Sect. "D"
RA to 1 9/16 ϕ for 1 1/2 ϕ H.S. Bolts
Cut 1x1 (Typ)
2-0 b.b. Flgs.
2-2 into in Guss (+1/16 -0)

ZENITH, A & B Corporation PA 342251103

D81C

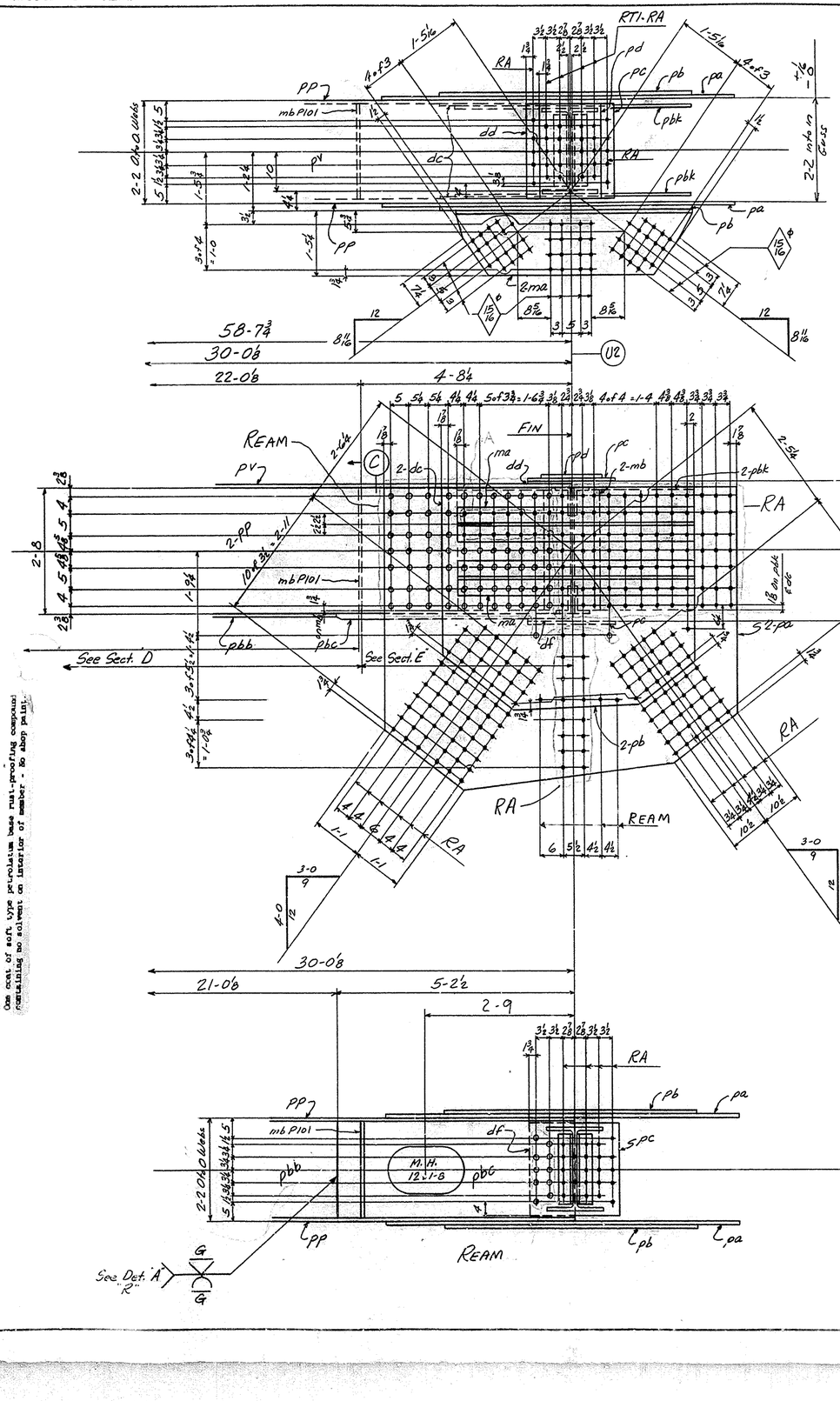

One coat of soft type petroleum base rust-proofing compound remaining no solvent on interior of member - No shop paint.

L i n e No.	TOTAL NO. OF PCS. OF SAME DESIGN	MATERIAL: NO. OF PIECES ON SAME BILL	MATERIAL: GRADE	MATERIAL: DIMENSIONS	MATERIAL: LENGTH		DIVISION AND SHOP	SHIPPING OR ASSEMBLING MARK	SHIPPING SPECIFICATIONS OR ASSEMBLING REFERENCE	REMARKS	CREDITED		CALCULATIONS OF U.S. TONS
					FEET	INCHES						ITEM	
1		1		Top Chord				101U0-U2R	96 x 63				
2		1		Top Chord				101U0-U2L	96 x 63				
3													
4		4	PL	32 1	57	8	FIE	PP		Web E	60¾x57-4½	99113	
5	2	2	PL	27 2	2	1	BIE	PH 101		Cov E	72 5-0	99049	
6		2	PL	24½ 5/8	57	5½	BIE/FIE	PV		Cov E	30x8-5½ 57-0	10117	
7	2	2	PL	24½ 1/4	5	2	BIE	PW 101		Cov E	84x 5-0	99059	
8		2	PL	24½ 5/8	18	0⅜	BIE	PY		Cov E	30x2-10 18-9-24	99033	
9	2	2	PL	24½ 1/4	7	7	BIE	PBA 101		Cov E	84x 5-0	99059	
10		2	PL	24½ 5/8	21	06	BIE	PBB		Cov E	30x2-10 31-11-12	99034	
11	2	2	PL	24½ 1/4	5	2½	BIE/FIE	PBC 101		Cov E	84x 5-0	99059	
12	4	4	PL	7⅛ 3/4	7	10⅜		PA 101		Gross(A440) E	7¼x31-7-24	10476	
13	4	4	PL	57 1/2	5	7⅝		PB 101		Gross(A440) E	6¼x22-10-24	99053	
14	4	4	CB	21 68	5	3⅜		MA 101		PL	21-3½	99046	
15	16	8	TCP	7 58.5	2	0⅜		MB 101			31-2½	99045	
16	4	4	PL	24 1/2	1	11½		PC 101		A440 E	84x 40-0	99048	
17	8	8	L	7 4	1/2	1/4		AA 101			40-0	99055	
18	2	2	PL	16⅝ 3/4	2	0		PD 101			84x 50-0	99061	
19	4	4	FLT	7 1/16		7¼		DA 101		Fil	30/33	99052	
20		2	PL	23 1/2	3	9⅜		PF			84x 50-0	99032	
21		2	PL	23 1/2	3	9		PG				99030	
22		4	PL	66⅝ 1	7	0	FIE	PH		Gross(A441) E	63¼x28-6-24	10514	
23	8	4	PL	22½ 3/8	4	8		PK 101		Gross(A440) E	48x37-5-24	99112	
24	2	2	FLT	8 3/4	6	0⅝	FIE	PM 101		E	84x 50-0	99001	
25	8	8	FLT	7 1	7	0	FIE	PN 101		A441 E	30/33	99043	
26	2	2	PL	26 1/2	7	0	FIELD FIE	PBD 101		A441 E	84x 50-0	99042	
27		4	L	4 4	7/16	2	11½	AB			20-0	99021	
28	2	2	PL	22 2	3	2	FIS	PBF 101			48x3/4 4-8	99026 KOND	
29	8	8	FLT	7 5/8		83⅜		PBG 101			84x 50-0	99040	
30	8	4	TCB	10 31	1	10½		MC 101		cf. 21LC862	31-7	99016	
31	8	8	L	7 4	1/2	1	9½	AC 101			40-0	99035	
32	2	2	PL	16⅝ 1⅜	2	0½		PBH 101			84x 3-6	99018	
33	4	4	FLT	7 7/8		9½		DB 101		Fil	30/33	99022	
34	4	4	PL	31 1/4	2	11	FIE	DC 101		Fil	84x 50-0	99044	
35	4	4	PL	31 1/8	5	3⅜		PBK 101		A440 E	71¾x32-9-24	99014	
36	2	2	SHT	24 1/8		1⅛	FIE	DD 101		Fil	72 10-0	99027	
37	2	2	PL	24 1/4		1⅛	FIE	DF 101		Fil	84x 50-0	99041	
38													
39		8	M	Bulkheads				MB P101		Det on P101			X
40													
41		1	M	Top Shoe				MA P101	U0-U2R For	Det P101 Cont K0939			X
42		1	M	Top Shoe				MB P101	U0-U2L For	Det P101 Cont K0939			X
43													
44													
45													
46													
47													
48													
49													
50	4	SB		7/8 ϕ								5	
51	16	SB		1 ϕ								5	
52													
53													
54													
55													
56													
57	12	HSB		1½ RD	7½					ord on P102 K0939			X
58													
59													
60													
61													
62													

B

B

C

Top Chords 101 U0-U2 R & L

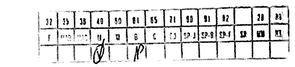

Notes:

All holes may be punched full size except holes noted "RA" are to be sub-punched or sub-drilled 1/8" and reamed to size while assembled. Holes noted "RF" to be sub-punched or sub-drilled 1/4" and reamed to size thru a metal templet. Holes noted "Ream" are to be sub-punched or sub-drilled 1/4" and reamed. In lieu of sub-punching or sub-drilling and reaming, holes may be drilled full size.

Sheared edges of material noted "E" in the remarks column of the shop bill are to be planed to a depth of 1/4" or be machine flame cut. A440 Steel to be Flame softened

"R" in the tail of a weld symbol denotes radiograph and "MP" Magnetic Particle Inspection.

All material is A36 steel except as noted in shop bill.

Rivets 1 U.N.
Open Holes 1 1/16 U.N.

Open Holes are for High Strength Structural Bolts Unless Noted A
NO PAINT within 5" of Holes for High Strength Structural Bolts

X-Ray ☑ Magnetic

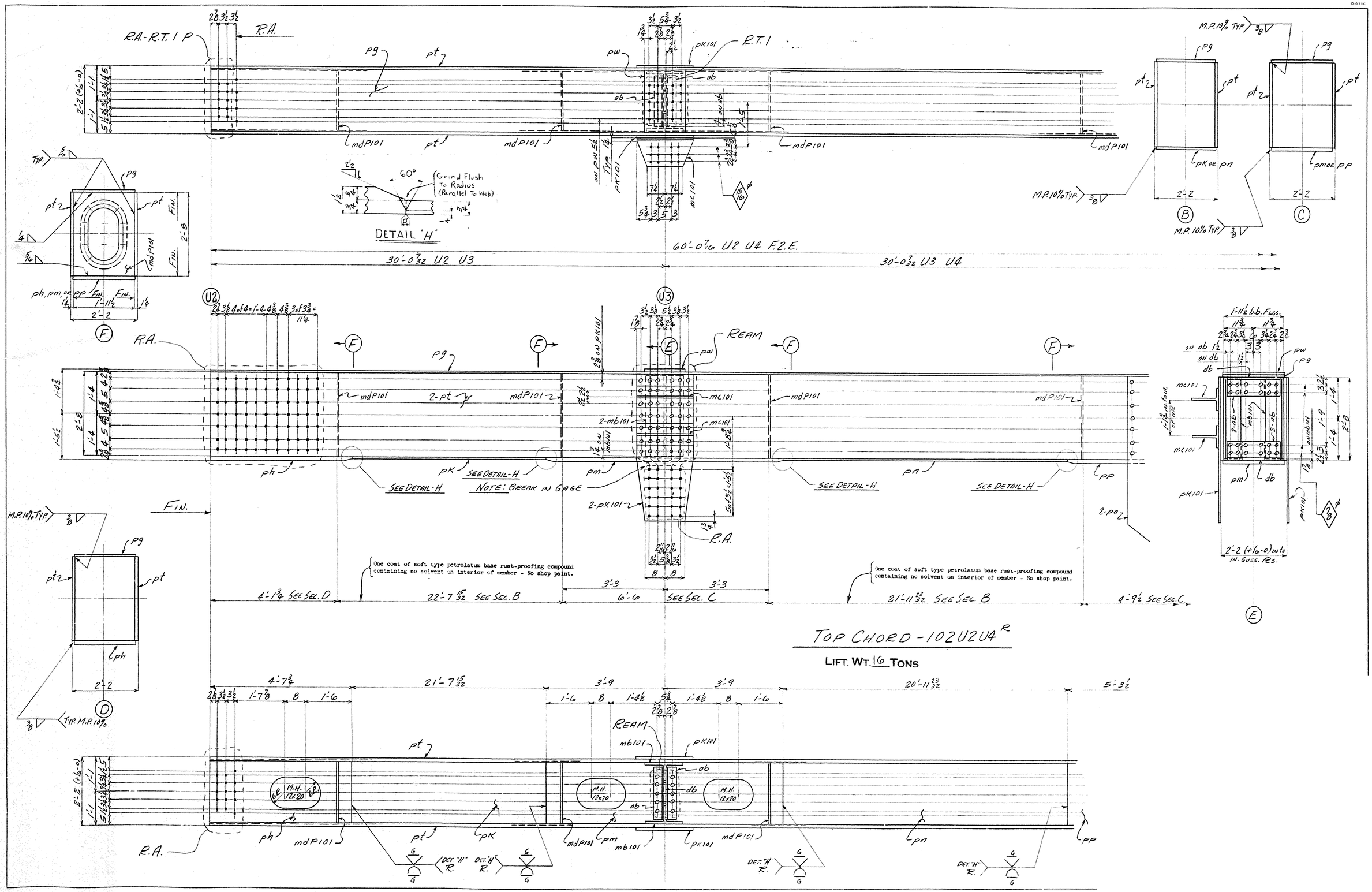

R.A.-R.T.1 P
R.A.
R.T.1
pg
pt
pw
pk101
ob
mdP101
mc101
Grind Flush To Radius (Parallel To Web)
DETAIL "H"
60°
60'-0 7/16 U2 U4 F.2.E.
30'-0 7/32 U2 U3
30'-0 7/32 U3 U4
M.P.10% TYP.
pk or pn
pm or pp
2'-2
B
C
F
U2
U3
E
REAM
2-pt
2-mb101
2-pk101
ph
pk
pm
pn
pp
SEE DETAIL-H
NOTE: BREAK IN GAGE
FIN.
2-pa
1'-11 1/2 b.b. FLGS.
2'-2 (+1/16-0) in to IN. GUSS. PLS.
One coat of soft type petrolatum base rust-proofing compound containing no solvent on interior of member - No shop paint.
4'-1 3/4 SEE SEC. D
22'-7 15/32 SEE SEC. B
6'-6 SEE SEC. C
21'-11 23/32 SEE SEC. B
4'-9 1/2 SEE SEC. C
3'-3
D
TYP. M.P.10%
TOP CHORD - 102U2U4 R
LIFT. WT. 16 TONS
4'-7 3/4
21'-7 15/32
3'-9
20'-11 23/32
5'-3 1/2
M.H. 12x20
6R.
DET. "H" R.
G

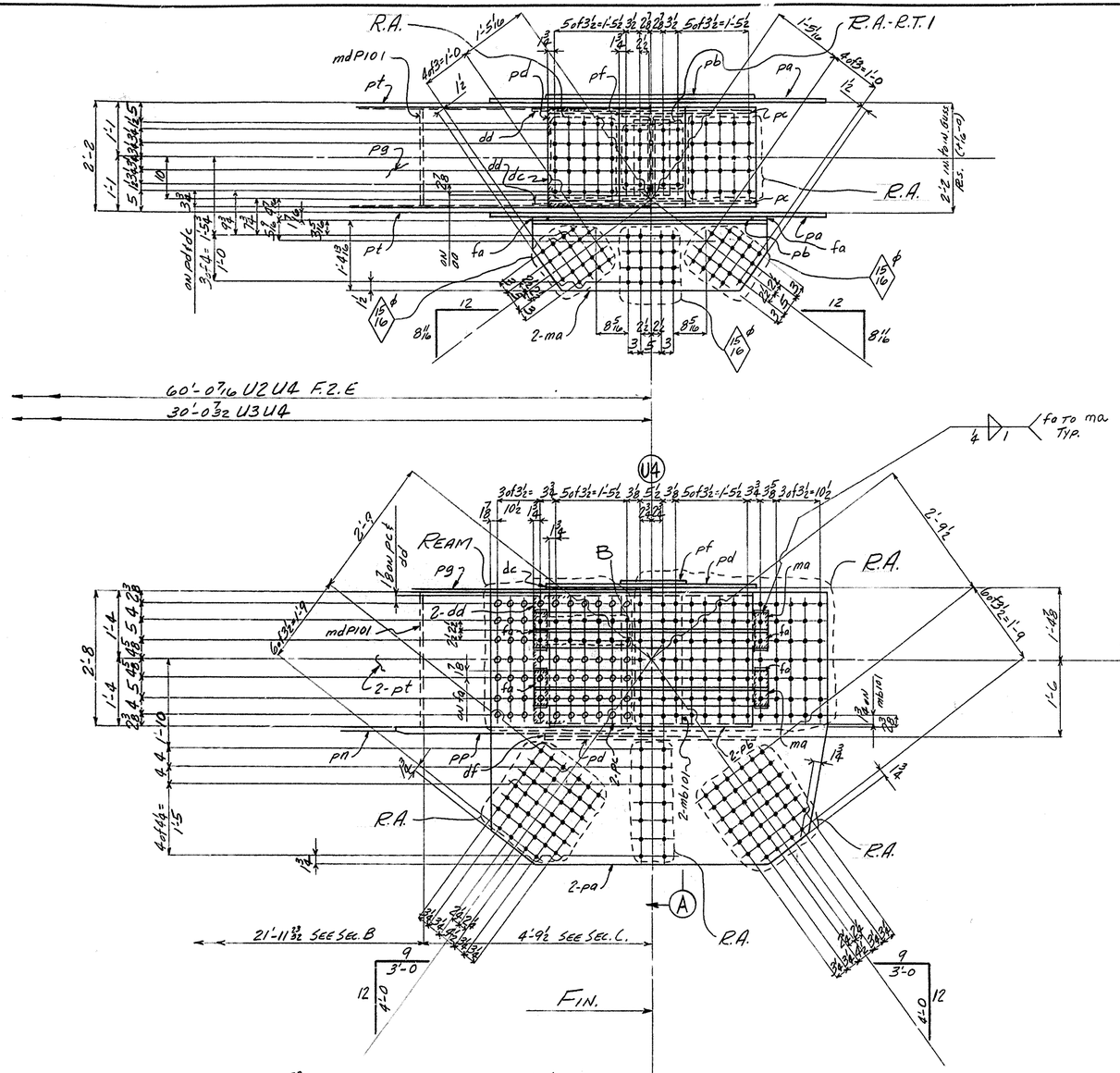

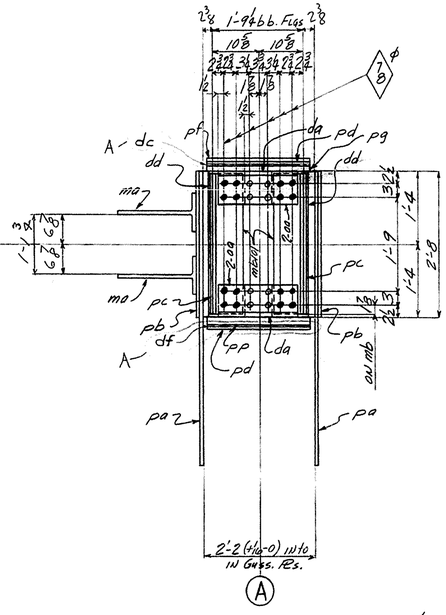

LINE NO.	TOTAL NO. OF PCS. ON ORDER	MATERIAL: NO. OF PCS. ON SKETCH	ABBRV. DESC.	DIMENSIONS	LENGTH: FEET	LENGTH: INCH	FINISH AND TRIM: DESC.	FINISH AND TRIM: INCH	SHIPPING OR ASSEMBLING MARK	SHIPPING SPECIFICATIONS OR ASSEMBLING REFERENCE	REMARKS	ORDERED	ITEM	CALCULATED WEIGHT FOR ONE SHIP PIECE
1														
2	1		TOP CHORD						102U2U4		68" 64'			
3	1		TOP CHORD						102U2U4		68" 64'			
4														
5	4	PL	6 3/4	13/16	6	10 1/2			pa		A440 E	65"W 2'-10 1/2 3/4	10142	
6	4	PL	32	5/8	4	2 4			pb		A440 E	33"W 2'-3 5/8	99094	
7	4	PL	31	7/8	4	2 4			pc		A440 E	32"W 2'-3 7/8	99196	
8	4	PL	23 1/2	3/4	4	3 4			pd		A440 E	24"W 2'-3 3/4	99097	
9	2	PL	16 1/4	3/8	1	11 1/2			pf			84"W 30-0	99031	
10	2	PL	24	3/4	60	0 7/16	F2E		pg		A441 E	49"W 60-0	10150	
11	2	PL	24	1/2	4	7 1/2	F.T.E.		ph		A441 E	49"W 30-0	99062	
12	2	PL	24	3/4	21	7 15/16	B2E		pk		A441 E	49"W 21-8	99107	
13	2	PL	24	1/2	7	6	B2E		pm		A441 E	49"W 7-0	99031	
14	2	PL	24	3/4	20	11 23/32	B2E		pn		A441 E	49"W 21-0	99076	
15	2	PL	24	1/2	5	3 1/2	F.T.E.		pp		A441 E	54"W 5-0	99087	
16	4	PL	32	1/2	60	0 7/16	F2E		pt		A441 E	65"W 60-0	10169	
17	4	PL	22 1/2	5/8	4	3			pk101		A440 E			
18	2	PL	16 1/4	1/4	2	0			pw			84"W 30-0	99059	
19	8	M	BILL KHEAD	Rs.					mdP101		SEE ON P101			
20														
21														
22														
23														
24														
25	4	CB	21	68	4	9 3/4			mq		PL	38-1"W	99107	
26	8	TCP	7	585	2	6 3/4			mb101					
27	4	TCB	10	31	1	10 1/2			mc101					
28														
29														
30	4	FLT	7	13/16		6 3/4			dq			30133	99002	
31	4	FLT	7	13/16		9			db				99003	
32	2	PL	23 1/2	8	2	1 3/8	F1E		dc			72"W 16-0	99027	
33	4	PL	31	1/4	2	0 3/8	F1E		dd			84"W 30-0	99049	
34	2	PL	23 1/2	1/2	2	1 3/8	F1E		df			84"W 30-0	99039	
35	8	FLT	3 1/2	3/8		8 3/4			fa			84"W 30-0	99035	
36														
37	8	L	7	4	1/2	1	6 3/4		aq			40"W	99057	
38	8	L	7	4	1/2	1	9		ab				99057	
39														
40														
41														
42														
43	1 (16)	SB	1											
44														
45														
46														
47														
48														
49														
50														
51														
52														
53														
54														
55														
56														
57														
58														
59														
60														
61														
62														

TOP CHORD 102U2U4

NOTES:

ALL MATERIAL TO BE A36 UNLESS NOTED IN REMARKS COLUMN OF SHOP BILL.

All holes may be punched full size except holes noted "RA" are to be sub-punched or sub-drilled 1/4" and reamed to size while assembled. Holes noted "RR" to be sub-punched or sub-drilled 1/4" and reamed to size thru a metal templet. Holes noted "Ream" are to be sub-punched or sub-drilled 1/4" and reamed. In lieu of sub-punching or sub-drilling and reaming, holes may be drilled full size.

Sheared edges of material noted "E" in the remarks column of the shop bill are to be planed to a depth of 1/4" or be machine flame cut. FLAME CUT EDGES OF A440 STEEL TO BE FLAME SOFTENED

"R" in the tail of a weld symbol denotes radiograph and "M" Magnetic Particle Inspection.

Open Holes are for High Strength Structural Bolts [redacted]
NO PAINT within 5" of Holes for High Strength Structural Bolts

1/4 RIVETS UNLESS NOTED

1/16 OPEN HOLES UNLESS NOTED

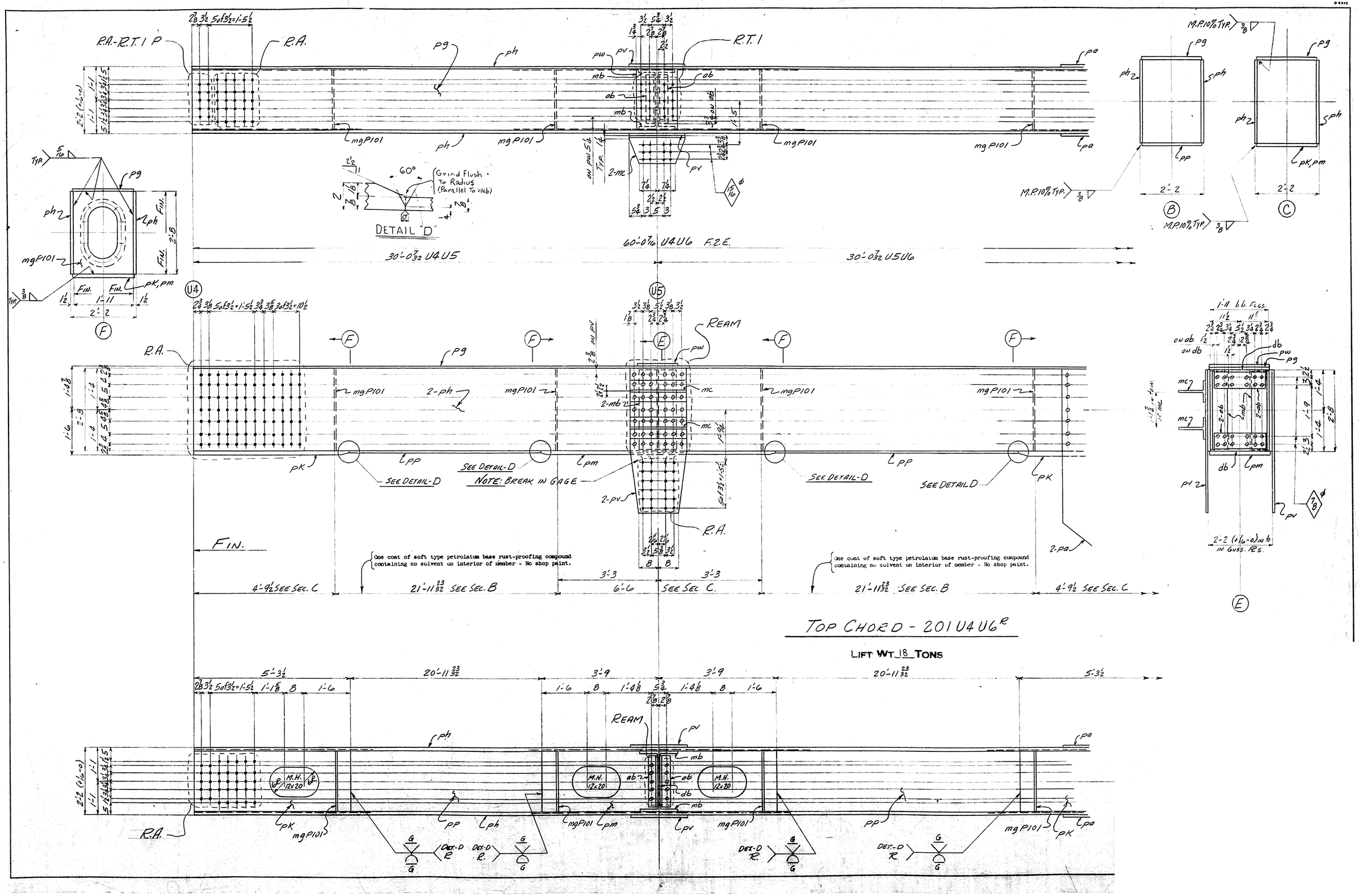

R.A.-R.T.1 P
R.A.
R.T.1
pg
ph
pw
pv
mb
ab
pa
mgP101
2-mc
60°
Grind Flush To Radius (Parallel To Web)
DETAIL "D"
60'-0 7/16 U4U6 F.2.E.
30'-0 7/32 U4U5
30'-0 7/32 U5U6
M.P.10% TYP.
pp
pk,pm
2'-2
B
C
F
U4
U5
E
REAM
2-ph
2-mb
mc
SEE DETAIL-D
NOTE: BREAK IN GAGE
2-pv
2-pa
FIN.
One coat of soft type petrolatum base rust-proofing compound containing no solvent on interior of member - No shop paint.
4'-9 1/2 SEE SEC. C
21'-11 23/32 SEE SEC. B
3'-3
6'-6
SEE SEC. C.
1'-11 bb. FLGS.
2-2 (+1/16-0) in to in Guss. Rs.
TOP CHORD - 201 U4U6 R
LIFT WT 18 TONS
5'-3 1/2
20'-11 23/32
3'-9
1'-6
1'-4 1/8
M.H. 12x20
DET-D R

ZENITH, A. & B. SMITH PGH., PA. J-6224 1F5

D 62C

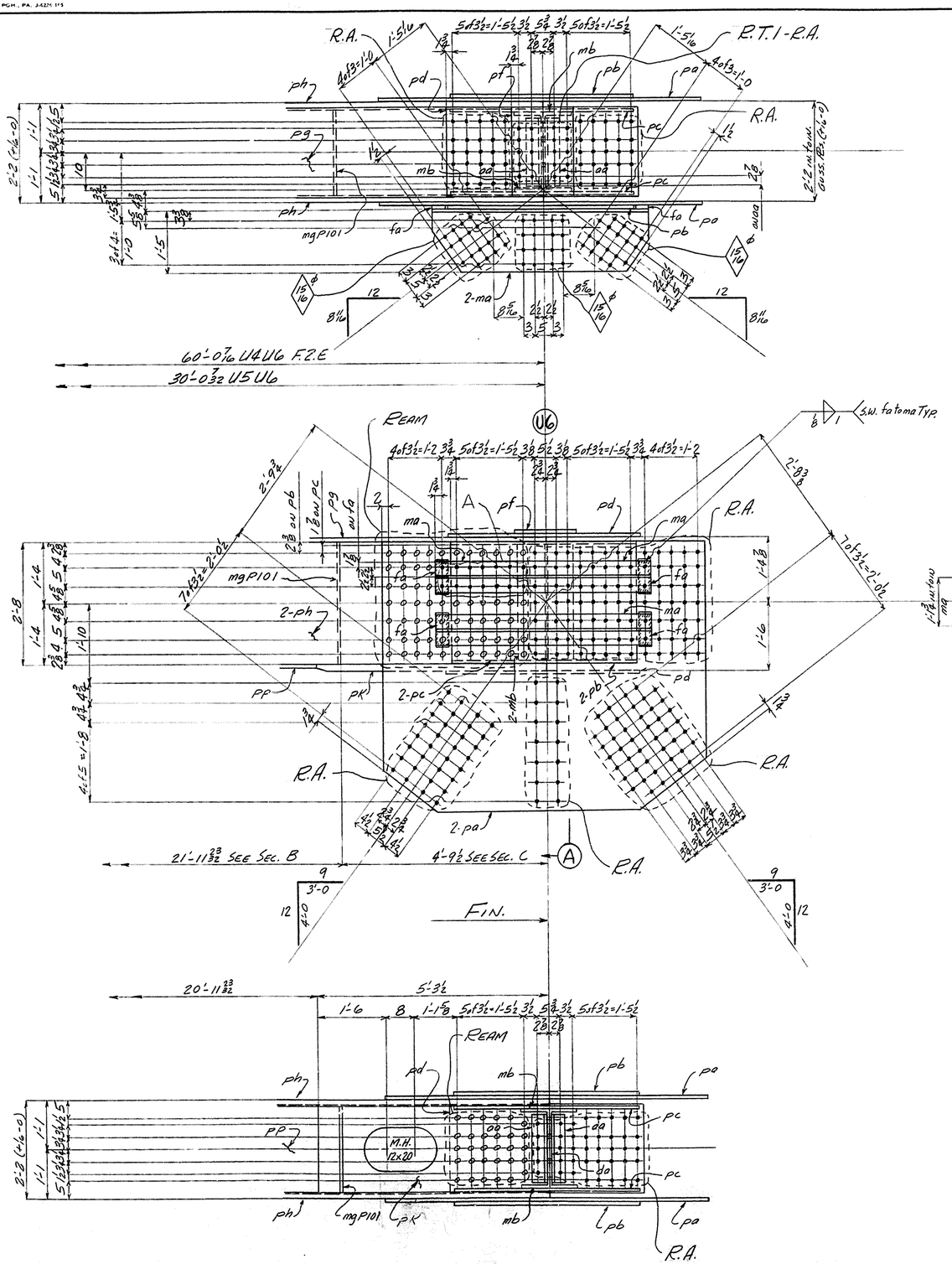

LINE NO.	TOTAL NO. OF PCS ON ORDER	MATERIAL: NO. OF PCS ON SKETCH	ABBRV. DESC.	DIMENSIONS	LENGTH: FEET	LENGTH: INCH	FINISH AND TRIM: DESC.	FINISH AND TRIM: INCH	SHIPPING OR ASSEMBLING MARK	SHIPPING SPECIFICATIONS OR ASSEMBLING REFERENCE	REMARKS	ORDERED	ITEM	CALCULATED WEIGHT FOR ONE SHIP PIECE
1														
2		1		TOP CHORD					201U4U6	73" 64'				
3		1		TOP CHORD					201U4U6	73" 64'				
4														
5		4	PL	6 9/16 3/4	7	2 1/4			pa		A440 E	75 3/4 +1/16 -0		1247
6		4	PL	32 5/8	4	2 1/4			pb		A440 E	33 5/8 +1/16 -0		1088
7		4	PL	31 7/8	4	2 1/4			pc		A440 E	32 1/4 +1/16 -0		1041
8		4	PL	23 1/2 3/4	4	3 1/4			pd		A440 E	24 3/4 +1/16 -0		1139
9		2	PL	16 1/2 3/8	1	1 1/2			pf			17 1/2 +1/16 -0		1031
10		2	PL	23 1/2 7/8	60	0 1/4	F2E		pg		A441 E	96 3/4 +1/16 -0		1676
11		4	PL	32 1/2	60	0 1/4	F2E		ph		A441 E	63 3/4 +1/16 -0		1064
12		4	PL	23 1/2 2	5	3 1/2	B2E		pk		A441 E	5 1/2 +1/16 -0		1760
13		2	PL	23 1/2 2	7	6	B2E		pm		A441 E			1760
14														
15		4	PL	23 1/2 7/8	20	11 23/32	B2E		pp		A441 E	95 3/4 +1/16 -0		1064
16														
17	8	4	PL	22 1/2 5/8	4	8 1/2			pv201		A440 E			0
18		2	PL	16 1/2 1/8	1	1 1/2			pw			84 +1/16 -0		1760
19		8	M	BULKHEAD PLS.					mgP101		DET. on PM			
20														
21														
22														
23														
24														
25		4	CB	21 6 8	4	9 3/4			ma		PL	38-9 1/2		1760
26	24	8	TCP	7 585	2	6 3/4			mb201					0
27	12	4	TCB	10 31	1	10 1/2			mc201			31-7		1760
28														
29														
30		4	FLT	7 13/16		6 3/4			da			30 1/32		1760
31		4	FLT	7 13/16		8 1/2			db					1760
32														
33														
34														
35														
36		8	FLT	3/32 5/8		8 3/4			fa			8 1/2 +1/16 -0		1760
37														
38														
39														
40		8	L	7 4 1/2 1		6 3/4			aa			43-0		1760
41		8	L	7 4 1/2 1		8 1/2			ab					1760
42														
43														
44														
45														
46	A	12	58	1					5					
47														
48												LINE 17 M (+1/16-0)		1760
49												43-0 +1/16 -0		
50												LINE 26 M		1760
51												8-10 1/2 +1/16 -0		
52														
53														
54														
55														
56														
57														
58														
59														
60														
61														
62														

TOP CHORD - 201U4U6

NOTES:

ALL MATERIAL TO BE A36 UNLESS NOTED IN REMARKS COLUMN OF SHOP BILL.

All holes may be punched full size except holes noted "RA" are to be sub-punched or sub-drilled 1/4" and reamed to size while assembled. Holes noted "TP" to be sub-punched or sub-drilled 1/4" and reamed to size thru a metal templet. Holes noted "Ream" are to be sub-punched or sub-drilled 1/4" and reamed. In lieu of sub-punching or sub-drilling and reaming, holes may be drilled full size.

Sheared edges of material noted "R" in the remarks column of the shop bill are to be planed to a depth of 1/4" or be machine flame cut. FLAME CUT EDGES OF A709 STEEL TO BE FLAME SOFTENED.

"R" in the tail of a weld symbol denotes radiograph and "MP" Magnetic Particle Inspection.

Open Holes are for High Strength Structural Bolts [redacted]
NO PAINT within 5" of Holes for High Strength Structural Bolts

1 φ RIVETS UNLESS NOTED

1 1/16 φ OPEN HOLES UNLESS NOTED

X-Ray ☒ Magnetic

D-63XC

TOP CHORD - 202U6U8R

LIFT. WT. 17 TONS

ZENITH, A. & D. SMITH PGH., PA. J-G226-165

D 61XC

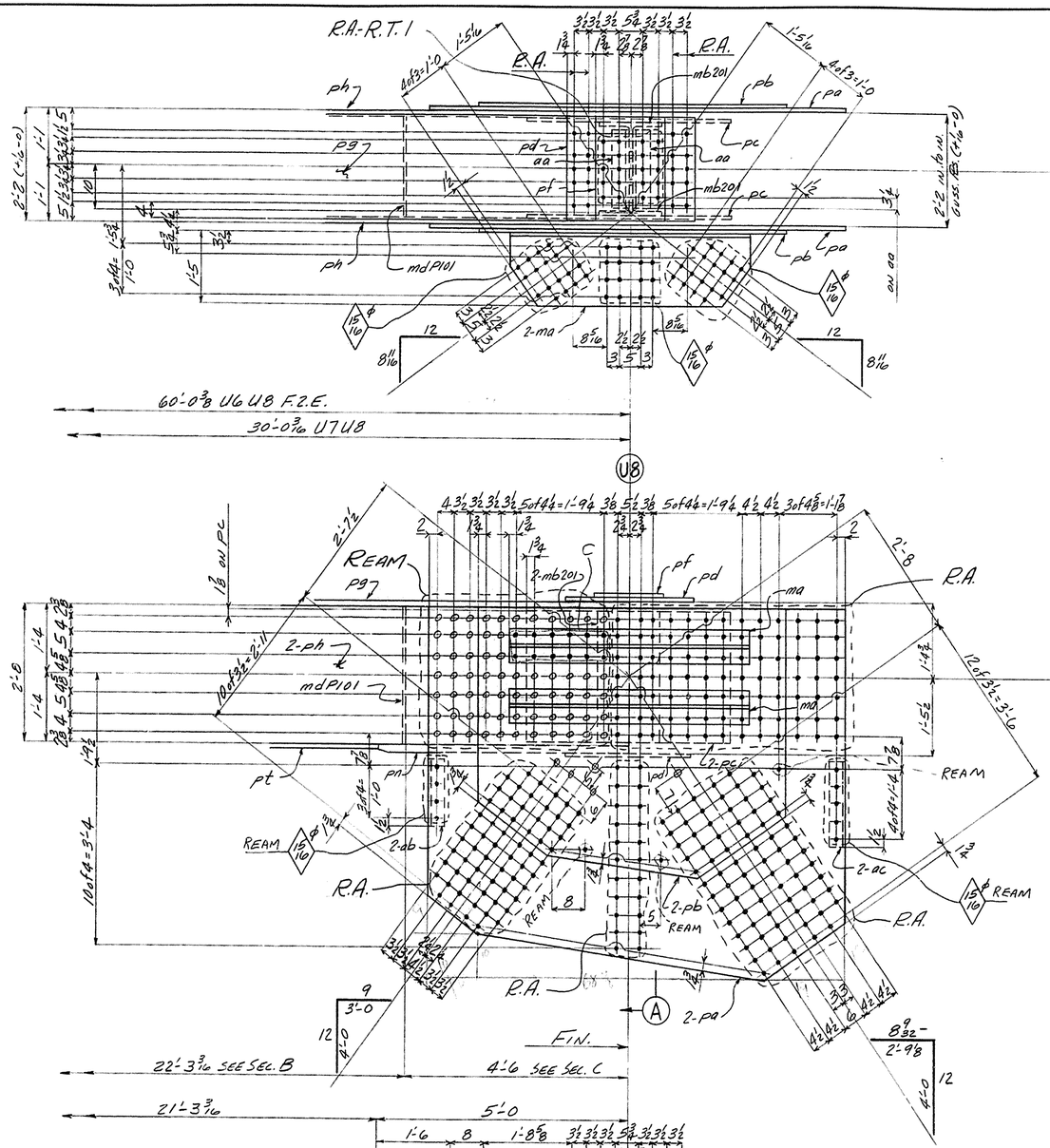

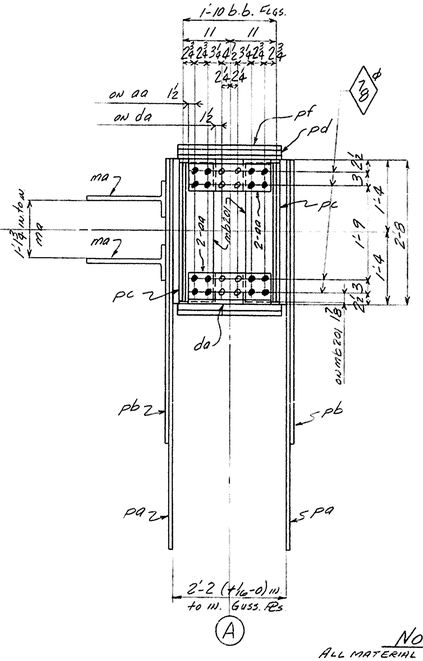

NOTES:

ALL MATERIAL TO BE A36 UNLESS NOTED IN REMARK COLUMN OF SHOP BILL.

All holes may be punched full size except holes noted "RA" are to be sub-punched or sub-drilled 1/4" and reamed to size while assembled. Holes noted "RR" to be sub-punched or sub-drilled 1/4" and reamed to size thru a metal templet. Holes noted "Ream" are to be sub-punched or sub-drilled 1/8" and reamed. In lieu of sub-punching or sub-drilling and reaming, holes may be drilled full size.

Sheared edges of material noted "E" in the remarks column of the shop bill are to be planed to a depth of 1/4" or be machine flame cut. FLAME CUT EDGES OF A440 STEEL TO BE FLAME SOFTENED.

"R" in the tail of a weld symbol denotes radiograph and "MP" Magnetic Particle Inspection.

Open Holes are for High Strength Structural Bolts [redacted]
NO PAINT within 5" of Holes for High Strength Structural Bolts

1 RIVETS UNLESS NOTED

11/16 OPEN HOLES UNLESS NOTED

LINE NO.	TOTAL NO. OF PCS ON ORDER	NO. OF PCS ON EACH	MATERIAL ABBR. DESC.	DIMENSIONS	LENGTH FEET	LENGTH INCH	FINISH AND PRIM DESC.	FINISH AND PRIM INCH	SHIPPING OR ASSEMBLING MARK	SHIPPING SPECIFICATIONS OR ASSEMBLING REFERENCE	REMARKS	ORDERED	ITEM	CALCULATED WEIGHT FOR ONE SHIP PIECE
1														
2		1		TOP CHORD					202U6U8	88" 65				
3		1		TOP CHORD					202U6U8	88" 65				
4														
5		4	PL	85 5/8 3/4	8	3 3/8			pa		A440 E	85 5/8 3/4 33-3 3/4		1348
6		4	PL	62 3/8 1/2	6	1 3/4			pb		A440 E	33-3 1/2		1052
7		4	PL	31 3/4	4	1 1/4			pc		A440 E	25-0 3/4		996
8		4	PL	24 1/2	2	6 1/4			pd		A440 E	5 1/2 32-0		858
9		2	PL	164 3/4	2	0			pf			8 1/4 30-0		1001
10		2	PL	24 3/4	60	0 3/8	F2E		pg		A431 E	4 3/4 60-0		1010
11		4	PL	32 1/4	60	0 3/8	F2E		ph		A431 E	6 3/4 60-0		1069
12		2	PL	24 1/2	5	3 3/8	F2E		pK		A431 E	5 1/4 30-0		1062
13		2	PL	24 1/2	7	6	F2E		pm		A431 E			1062
14		2	PL	24 1/2	5	0	F2E		pn		A431 E			1062
15		2	PL	24 3/4	20	11	F2E		pp		A431 E	17 3/4 30-0		1037
16		2	PL	24 3/4	21	3	F2E		pt		A431 E			1082
17		4	PL	22 1/2 5/8	4	8 1/2			pv201		A440 E			
18		2	PL	164 1/4	2	0			pw			5 1/4 30-0		1019
19		8	M	BULKHEAD PLS.					mdP101		DET. on P101			
20														
21														
22														
23														
24														
25		4	CB	21 6B	4	9 3/4			ma		PL	35-9 1/2		1027
26		8	TCP	7 5B6	2	6 3/4			mb201					
27		4	TCB	10 31	1	10 1/2			mc201					
28														
29														
30	8	4	FLT	7 13/16		7 1/2			dq202			30 33		1032
31		4	FLT	7 13/16		9			db					1032
32		4	PL	31 1/4	2	4 3/8	F1E		dc			8 1/4 30-0		1044
33		2	SHT	23 1/2 1/8	2	1 3/8	F1E		dd			7 3/4 30-0		1007
34		2	PL	23 1/2 1/2	2	1 3/8	F1E		df			8 1/4 30-0		1019
35	16	8	L	7 4 1/2	1	7 1/2			aq202			40-0		1045
36		4	L	3 1/2 3 1/2	3/8	1 3			ab			30-0		1009
37		4	L	3 1/2 3 1/2	3/8	1 7			ac					1044
38		8	L	7 4 1/2	1	1 9			ad			40-0		1045
39														
40														
41														
42														
43		12	SB	1										5
44		16	SB	7/8										5
45														
46														
47														
48														
49														
50														
51														
52														
53														
54														
55														
56														
57														
58														
59														
60														
61														
62														

TOP CHORD - 202U6U8

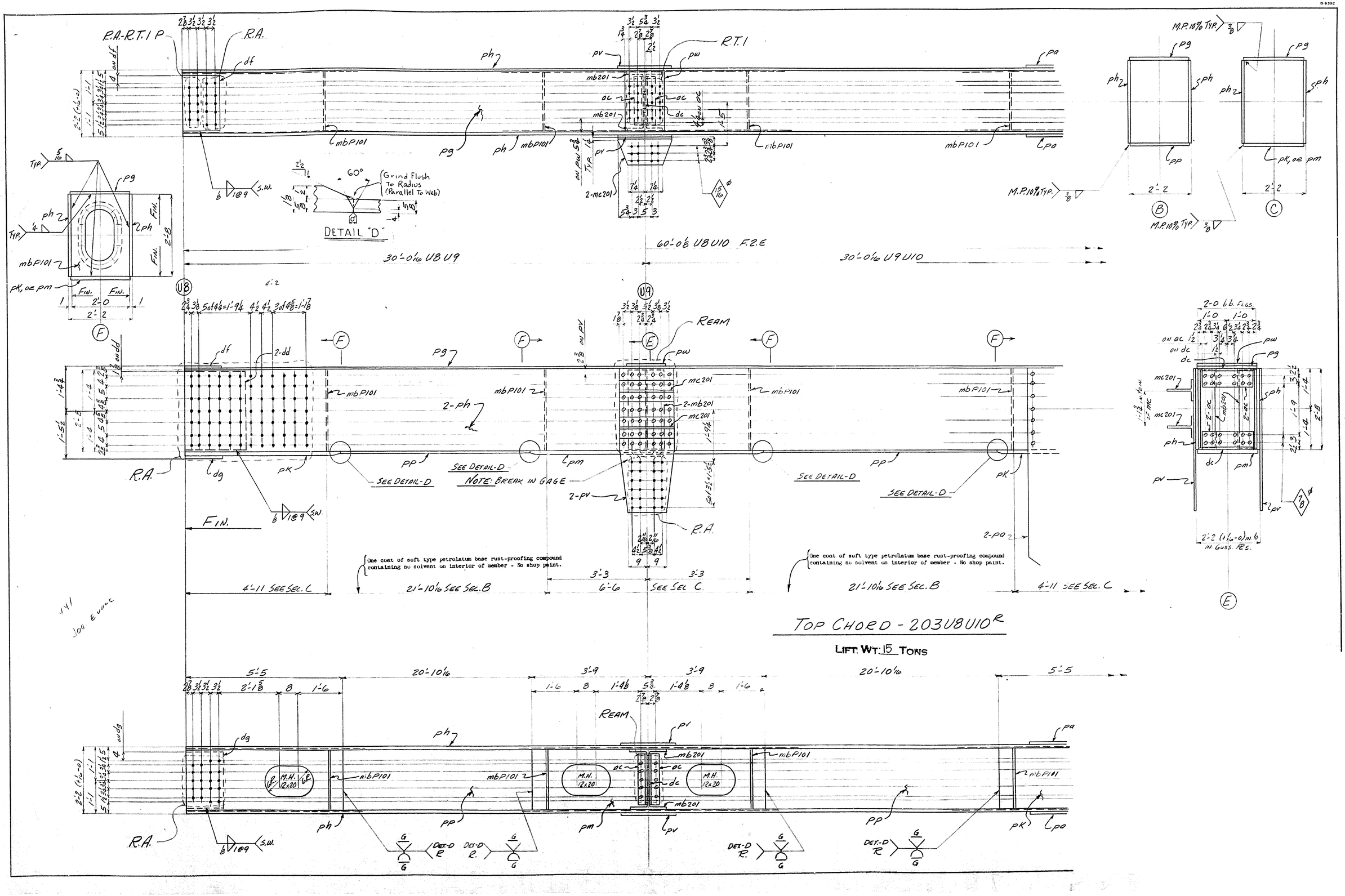

R.A.-R.T.1 P
R.A.
R.T.1
DETAIL "D"
Grind Flush To Radius (Parallel To Web)
60°
30'-0 1/16 U8U9
60'-0 1/8 U8U10 F.2.E
30'-0 1/16 U9U10
M.P.10% TYP.
REAM
SEE DETAIL-D
NOTE: BREAK IN GAGE
FIN.
One coat of soft type petrolatum base rust-proofing compound containing no solvent on interior of member - No shop paint.
4'-11 SEE SEC. C
21'-10 1/16 SEE SEC. B
6'-6 SEE SEC. C
TOP CHORD - 203U8U10R
LIFT. WT: 15 TONS
20'-10 1/16
5'-5
M.H. 12x20
DET.-D R

ZENITH, A. & D. SMITH PGH., PA. J-4226-165

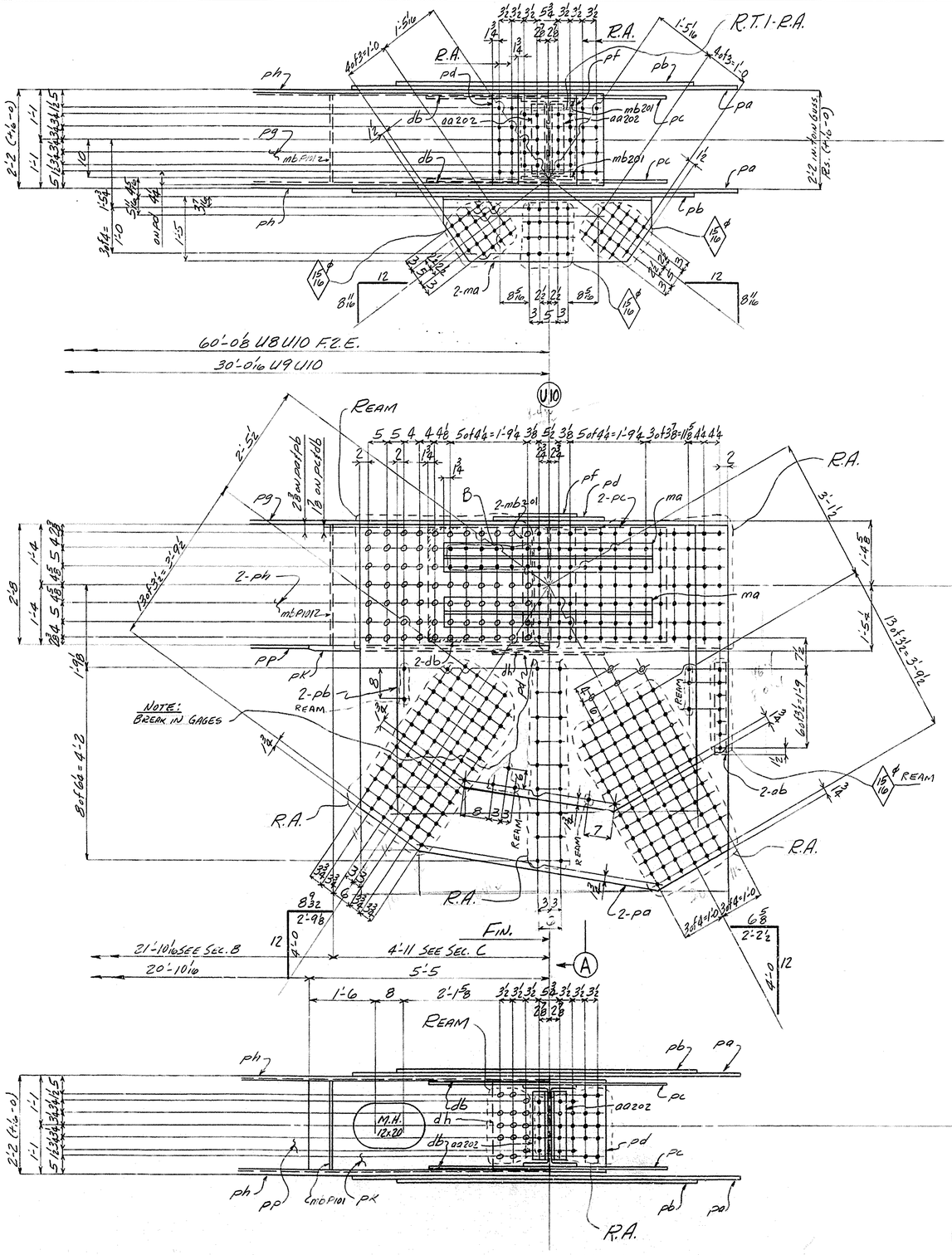

LINE NO.	TOTAL NO. OF PCS. ON ORDER	MATERIAL: NO. OF PCS. ON SKETCH	ABBR. DESC.	DIMENSIONS	LENGTH: FEET	LENGTH: INCH	FINISH AND PAINT: DESC.	FINISH AND PAINT: INCH	SHIPPING OR ASSEMBLING MARK	SHIPPING SPECIFICATIONS OR ASSEMBLING REFERENCE	REMARKS	ORDERED: ITEM	CALCULATED WEIGHT FOR ONE UNIT PIECE
1													
2	1			TOP CHORD					203U8U10R 99" 65'				
3	1			TOP CHORD					203U8U10F 99" 65'				
4													
5	4	PL	96	13/16	8	4½			pa		A440 E	37½ 32-10	11740
6	4	PL	79	1/2	6	10			pb		A440 E	77 3/4 32-10	11050
7	4	PL	31	7/8	5	5¾			pc		A440 E	7 3/4 32-10	9943
8	4	PL	24½	1/2	2	6¼			pd		A440 E	8¼ 32-0	4008
9	2	PL	16¼	7/8	2	0½			pf			8¼ 32-0	4006
10	2	PL	24½	5/8	6	0	06	F2E	pg		A441 E	10 3/4 32-10	1081
11	4	PL	32	1	6	0	08	F2E	ph		A441 E	6 3/4 32-10	1073
12	4	PL	24½	1/8	5	5	06	B2E	pk		A441 E	5 3/4 32-10	4011
13	2	PL	24½	1/8	7	6	08	B2E	pm		A441 E		4011
14													
15	4	PL	24½	5/8	20	10	16	B2E	pp		A441 E	5 3/4 32-10½	9854
16													
17	4	PL	22½	5/8	4	8½			pv	USE 1/4" t & r	A440 E	4 3/4 32-10	9912
18	2	PL	16¼	1/8	2	0½			pw			8¼ 32-6	1026
19													
20													
21													
22													
23													
24													
25	4	CB	21	68	4	9¾			ma		Pc	35-4½	9027
26	8	TCP	7	585	2	6¾			mb201				
27	4	TCB	10	31	1	10½			mc201				
28	8	M	BULKHEAD RS.						mbP101		DET ON PIN		
29													
30	4	FLT	7	3/16		7½			da202				
31	A 4	PL	31	1/4	2	9	FIE		db				
32	4	FLT	7	13/16		9¾			dc			3 1/32	1062
33	4	PL	31	1/4	2	0¾	FIE		dd			8¼ 32-0	4004
34	2	SHT	24	1/8	1	3⅜	FIE		df			7¼ 16-0	1027
35	2	PL	24	3/8	1	3⅜	FIE		dg			8¼ 32-0	4031
36	8	L	7	4	½	1	7½		aa202				
37	4	L	3½	3½	3/8	2	0		ab			3-0	4009
38	8	L	7	4	½	1	9½		ac			4-0	4005
39	2	SHT	24½	8		1	3⅜	FIE	dh			7¼ 16-0	1027
40													
41													
42													
43													
B 44	12	SB		1/8									5
45	8	SB		1/8									5
46													
47													
48													
49													
50													
51													
52													
53													
54													
55													
56													
57													
58													
59													
60													
61													
62													

A — E

TOP CHORD - 203U8U10

R.A.-R.T.1P

R.A.

R.T.1

DETAIL "D"

DETAIL "G"

29'-11⅞ U10 U11

59'-11¾ U10U12 F.2.E.

29'-11⅞ U11 U12

M.P.10% TYP.

(B)

(C)

(F)

U10

U11

REAM

SEE DETAIL-D

NOTE: BREAK IN GAGE

SEE DETAIL-G

R.A.

FIN.

One coat of soft type petrolatum base rust-proofing compound containing no solvent on interior of member - No shop paint.

4'-7¼ SEE SEC. C

22'-1⅝ SEE SEC. B

6'-6

SEE SEC C.

22'-3⅛ SEE SEC.B

4'-5¾ SEE SEC. C

(E)

TOP CHORD - 30IU10U12R

LIFT. WT. 17 TONS

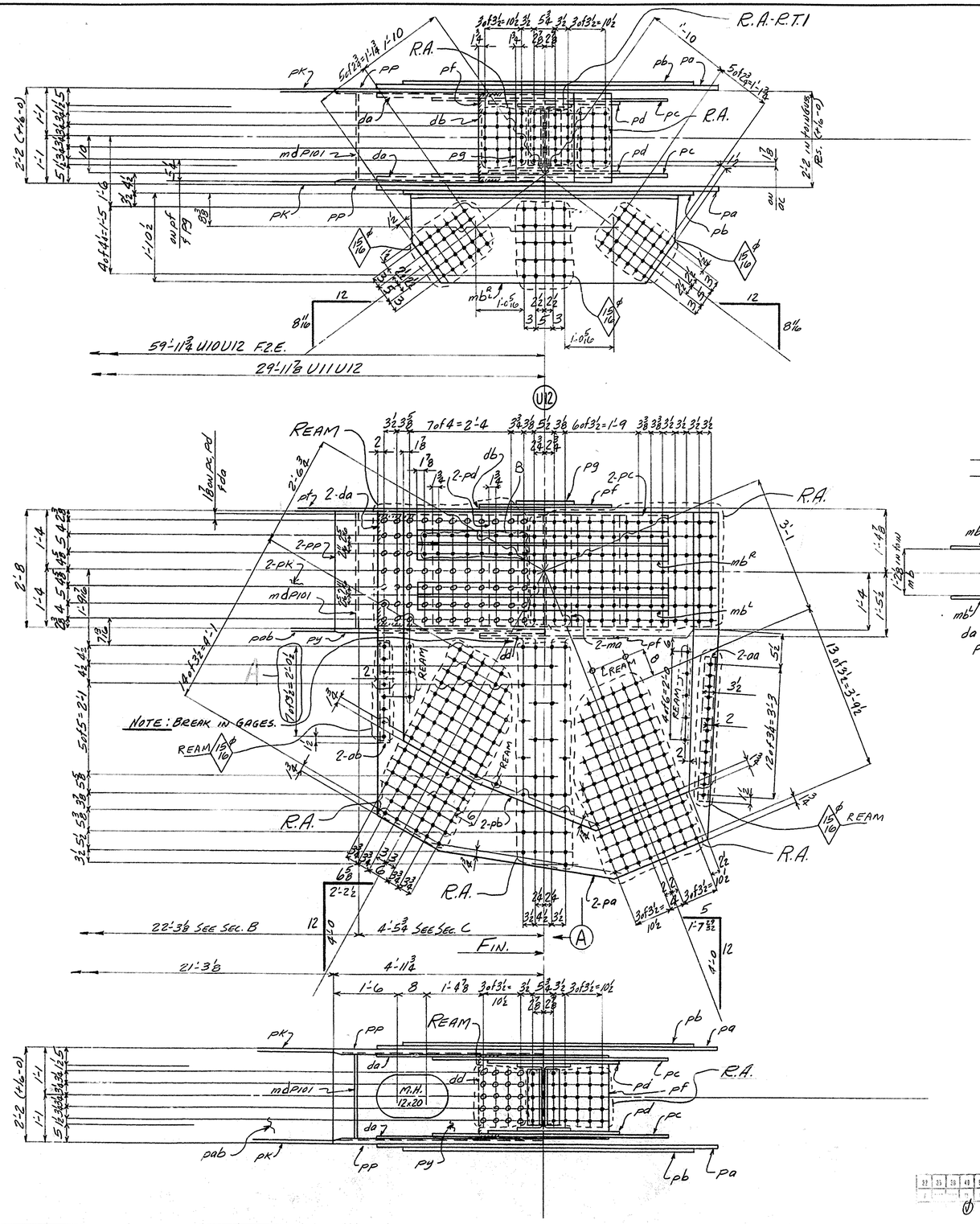

LINE NO.	TOTAL NO. OF PCS. ON ORDER	MATERIAL: NO. OF PCS. ON SKETCH	ABBRV. DESC.	DIMENSIONS	LENGTH: FEET	LENGTH: INCH	FINISH AND TRIM: DESC.	FINISH AND TRIM: INCH	SHIPPING OR ASSEMBLING MARK	SHIPPING SPECIFICATIONS OR ASSEMBLING REFERENCE	REMARKS	ORDERED: ITEM	CALCULATED WEIGHT FOR ONE SHIP PIECE
1													
2		1		TOP CHORD					301U10U12 R	101" 65			
3		1		TOP CHORD					301U10U12 L	101" 65			
4													
5		4	PL	9⅝ × 7/8	8	2⅝			pa		A440 E	1325	
6		4	PL	8⅛ × 5/8	7	1⅛			pb		A440 E	1052	
7		4	PL	31 × 5/8	5	6¾			pc		A440 E	2911	
8		4	PL	31 × 1/2	3	1			pd		A440 E	1940	
9		4	PL	23½ × 5/8	3	1¼			pf		A440 E	1703	
10		2	PL	16½ × 1/2	1	11½			pg			1039	
11		4	PL	32 × 1	21	1⅜	B2E		ph		A441 E	1201	
12		4	PL	32 × 1	21	3⅜	B2E		pk		A441 E	1662	
13		4	PL	32 × 1/4	5	1¼	F/E B2E		pm		A441 E	1970	
14		4	PL	32 × 1/4	7	1⅙	B2E		pn		A441 E	2757	
15		4	PL	32 × 1/4	4	1⅜	F/E B2E		pp		A441 E	1978	
16		2	PL	24¾ × 5/8	59	11¾	F2E		pt		A441 E	1881	
17		2	PL	24¾ × 1/4	5	1¼	F/E B2E		pv		A441 E	1970	
18		2	PL	24⅝ × 1/4	7	1⅙	B2E		pw		A441 E	2757	
19		2	PL	24¾ × 1/4	4	1⅜	F/E B2E		py		A441 E	1970	
20		2	PL	24⅝ × 5/8	21	1⅜	B2E		paa		A441 E	1978	
21		2	PL	24⅝ × 5/8	21	3⅜	B2E		pab		A441 E	1976	
22		4	PL	22½ × 5/8	4	1¼			pac		A440 E	1903	
23		2	PL	16⅛ × 1/8	2	0¾			pad			1918	
24													
25		4	PL	31 × 1	3	10½	F/E		da			1970	
26		2	PL	23½ × 1/4	1	6⅝	F/E		db			1904	
27		4	PL	7 × 7/16		9			dc			1920	
28		2	PL	23½ × 1/4	1	6⅝	F/E		dd			1904	
29	16	8	TCP	7 × 5/8	2	6¾			ma301			1970	
30		4	CB	24 × 76	5	11			mb R			1970	
31		4	TCB	10 × 31	1	10½			mc		5/31CB62	1970	
32													
33													
34		4	FLT	4¾ × 13/16		7			fa			1968	
35													
36													
37		4	L	5 × 3½ × 1/2	3	6			aa			1932	
38		4	L	3½ × 3½ × 3/8	2	3½			ab			1908	
39		8	L	7 × 4 × 1/2	1	9¾			ac			1920	
40		8	L	7 × 4 × 1/2	1	9			ad			1916	
41													
42													
43		8	M	BULKHEADS					mdP101		DET on P101		X
44													
45		12	SB	1									S
46		16	SB	7/8									S
47													
48													
49													
50													
51													
52													
53													
54													
55													
56													
57													
58													
59													
60													
61													
62													

TOP CHORD - 301U10U12

NOTES:

ALL MATERIAL TO BE A36 UNLESS NOTED IN REMARKS COLUMN OF SHOP BILL.

All holes may be punched full size except holes noted "RA" are to be sub-punched or sub-drilled 1/4" and reamed to size while assembled. Holes noted "RT" to be sub-punched or sub-drilled 1/4" and reamed to size thru a metal templet. Holes noted "Ream" are to be sub-punched or sub-drilled 1/4" and reamed. In lieu of sub-punching or sub-drilling and reaming, holes may be drilled full size.

Sheared edges of material noted "E" in the remarks column of the shop bill are to be planed to a depth of 1/4" or be machine flame cut. FLAME CUT EDGES OF A840 STEEL TO BE FLAME SOFTENED.

"R" in the tail of a weld symbol denotes radiograph and "MP" Magnetic Particle Inspection.

Open Holes are for High Strength Structural Bolts [illegible], NO PAINT within 5" of Holes for High Strength Structural Bolts

1/16 ϕ OPEN HOLES UNLESS NOTED

1 ϕ RIVETS UNLESS NOTED

X-Ray X

TOP CHORD - 302 U12U14R

LIFT. WT. 24 TONS

F	
E	
D	
C	
B	
A	

REVISIONS

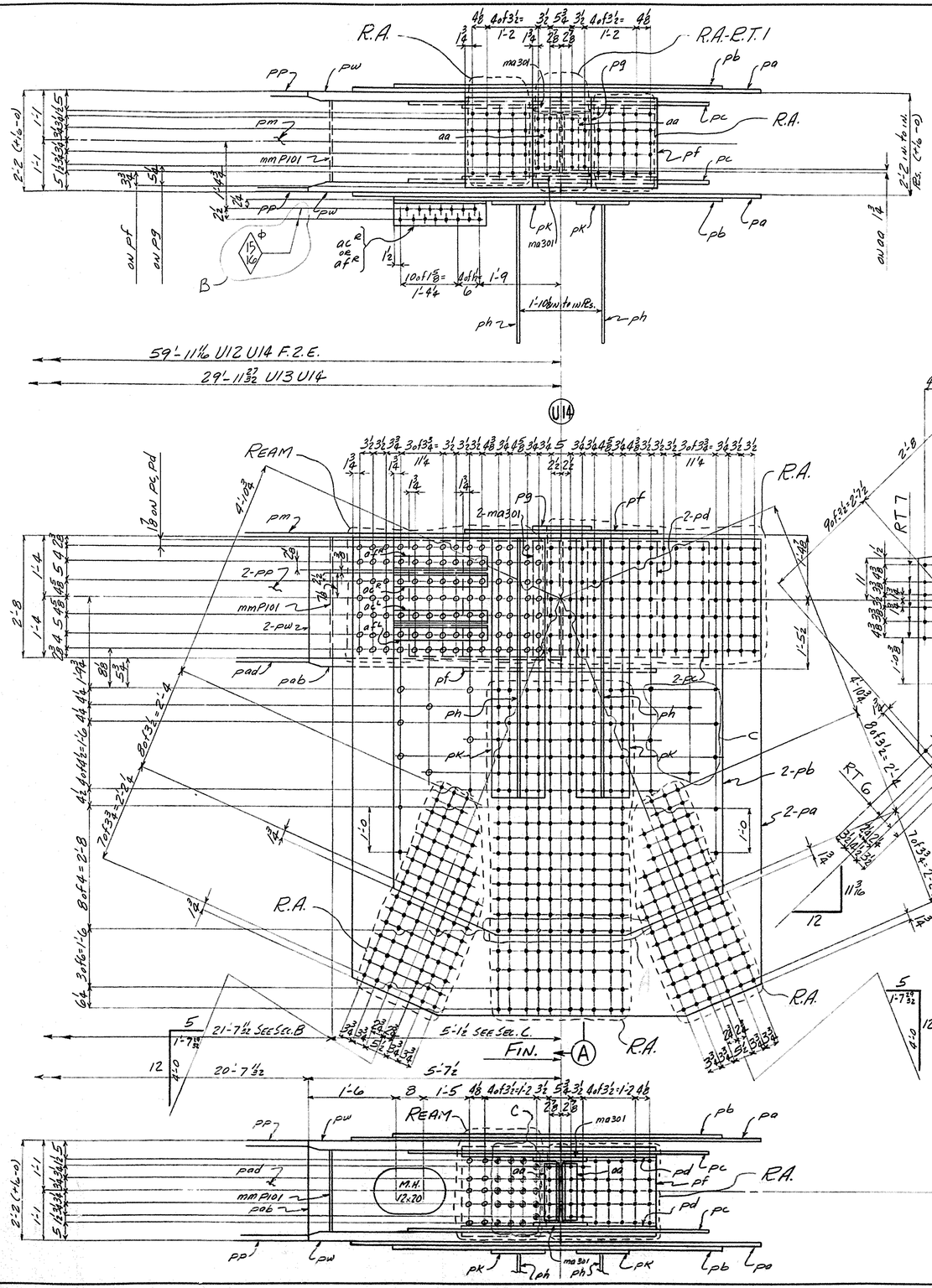

LINE NO.	TOTAL NO. OF PCS. ON ORDER	MATERIAL: NO. OF PCS. ON SKETCH	ABBREV. DESC.	DIMENSIONS	LENGTH: FEET	LENGTH: INCH	FINISH AND TRIM: DESC.	FINISH AND TRIM: INCH	SHIPPING OR ASSEMBLING MARK	SHIPPING SPECIFICATIONS OR ASSEMBLING REFERENCE	REMARKS	ORDERED: ITEM	CALCULATED WEIGHT FOR ONE SHIP PIECE
1													
2		1		TOP CHORD					302U12U14R	129" 65'			
3		1		TOP CHORD					302U12U14L	129" 65'			
4													
5		4	PL	11 1/2 × 7/8		10 6 3/4			pa		A440 E	111 1/2 c-c -1-3/4	1032
6		4	PL	8 9/16 × 5/8		8 6 1/2			pb		A440 E	92 1/2 c-c -1-3/4	1049
7		4	PL	31 × 5/8		6 10			pc		A440 E	63 3/4 c-c -1-1/4	1111
8		4	PL	31 × 5/8		4 5			pd		A440 E	32 c-c -1-3/4	1100
9		4	PL	23 1/2 × 7/8		4 4 1/2			pf		A440 E	179 1/2 c-c -1-3/4	1109
10		2	PL	16 1/4 × 1/4		1 1 1/2			pg			81 1/2 -0	1100
11		4	PL	37 1/4 × 5/8		5 6			ph		A441 E	84 1/2 -0 -6	1071
12		4	PL	15 × 1		5 6			pK		A441 E	61 3/4 x 21 -6	1112
13		2	PL	23 1/2 × 7/8		59 11 1/16	F2E		pm		A441 E	257 c-c -1-1/4	1108
14		4	PL	32 × 1 1/2		21 1 3/8	B2E		pn		A441 E	65 3/4 c-c -1-3/4	1052
15		4	PL	32 × 1/2		20 7 1/32	B2E		pp		A441 E	65 3/4 c-c -1-3/4	1051
16		4	PL	32 × 2 1/4		5 1 3/4	F1E B1E		pt		A441 E	7 1/2 -0	1100
17		4	PL	32 × 2 1/4		7 6	B2E		pv		A441 E		1101
18		4	PL	32 × 2 1/4		5 7 1/2	F1E B1E		pw		A441 E		1100
19		2	PL	23 1/2 × 1 1/2		5 1 3/4	F1E B1E		py		A441 E		1100
20		2	PL	23 1/2 × 1 1/2		7 6	B2E		paa		A441 E	8 1/2	1100
21		2	PL	23 1/2 × 1 1/2		5 7 1/2	F1E B1E		pab		A441 E	20-0	1100
22		2	PL	23 1/2 × 7/8		21 1 3/32	B2E		pac		A441 E	92 3/4 c-c -1-1/4	1063
23		2	PL	23 1/2 × 7/8		20 7 11/32	B2E		pad		A441 E		1063
24		4	PL	24 × 3/4		4 1 1/2			paf		A440 E	241 -0	1100
25		2	PL	16 1/4 × 1/8		1 1 1/2			pag			81 1/2 -0	1100
26													
27		8	TCP	7 585		2 6 3/4			ma301				
28		4	TCB	10 31		2 0			mb		CF 21.CA.62	31-7	1100
29													
30													
31		4	FIT	4 1/2 × 13/16		7			fa			48 -0 -5	1100
32													
33		8	L	7 4 × 1/2	1	4 1/2			aq			40-0	1100
34		8	L	7 4 × 1/2	1	7			ab				1100
35		4	L	6 4 × 3/8	2	1/2			ac E			30-0	1100
36		4	L	6 4 × 3/8	2	1/2			af E				1100
37		4	FIT	7 × 13/16		7			da			30 33	1100
38													
39													
40		8	M	BULKHEAD Rs.					mmP101		DET. on P101		X
41													
42													
43		12	SB	1									5
44													
45													
46													
47													
48													
49													
50													
51													
52													
53													
54													
55													
56													
57													
58													
59													
60													
61													
62													

TOP CHORD - 302U12U14

NOTES:

ALL MATERIAL TO BE A36 UNLESS NOTED IN REMARKS COLUMN OF SHOP BILL.

All holes may be punched full size except holes noted "RA" are to be sub-punched or sub-drilled 1/4" and reamed to size while assembled. Holes noted "RT" to be sub-punched or sub-drilled 1/4" and reamed to size thru a metal templet. Holes noted "Ream" are to be sub-punched or sub-drilled 1/4" and reamed. In lieu of sub-punching or sub-drilling and reaming, holes may be drilled full size.

Sheared edges of material noted "E" in the remarks column of the shop bill are to be planed to a depth of 1/4" or be machine flame cut. FLAME CUT EDGES OF A 440 STEEL TO BE FLAME SOFTENED.

"R" in the tail of a weld symbol denotes radiograph and "MP" Magnetic Particle Inspection.

Open Holes are for High Strength Structural Bolts [redacted]
NO PAINT within 5" of Holes for High Strength Structural Bolts

1 RIVETS UNLESS NOTED

1/16 OPEN HOLES UNLESS NOTED

X-Ray Magna

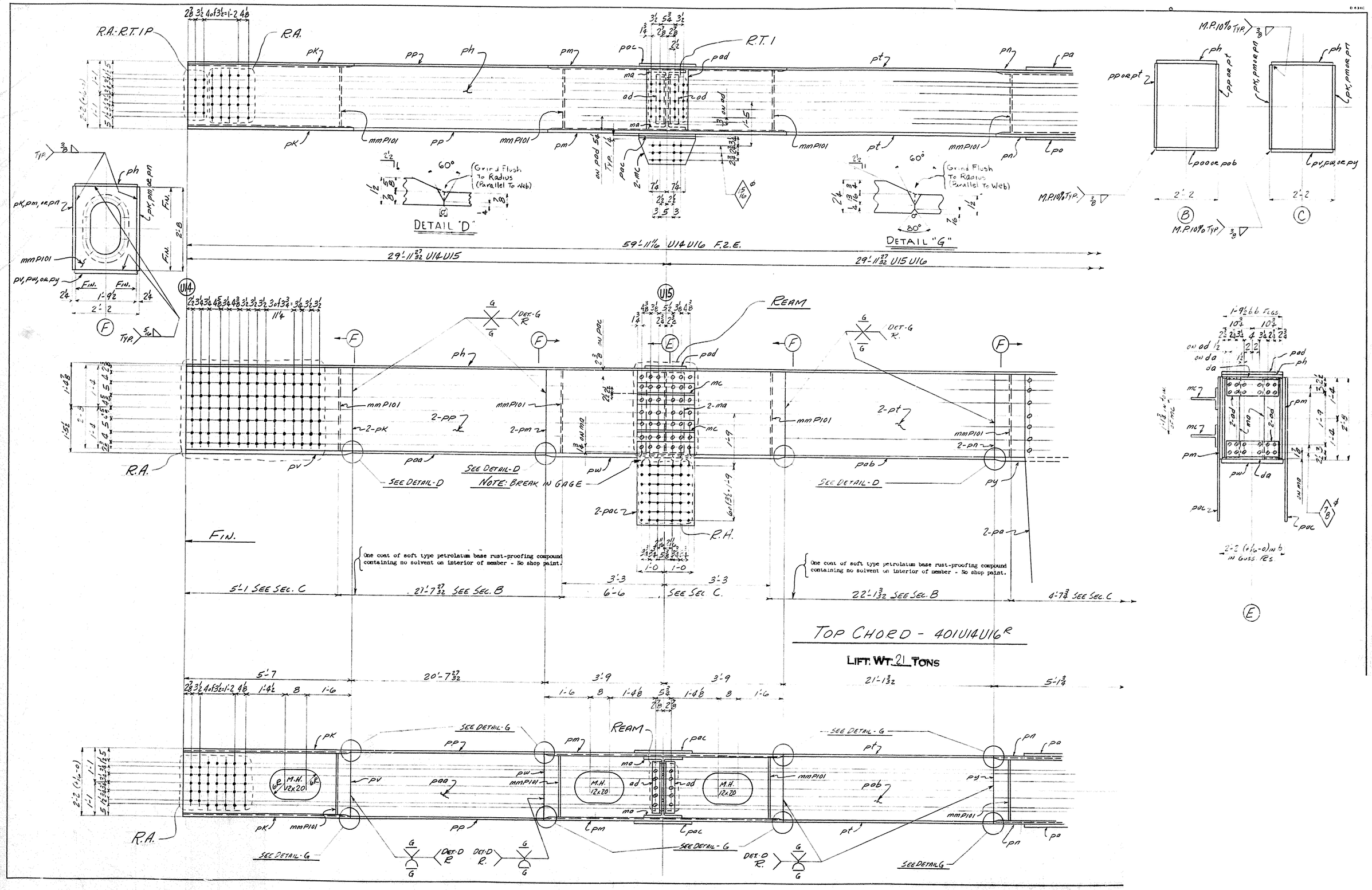

R.A.-R.T.1P
R.A.
R.T.1
DETAIL "D"
DETAIL "G"
Grind Flush To Radius (Parallel To Web)
59'-11 1/16 U14U16 F.2.E.
29'-11 27/32 U14U15
29'-11 27/32 U15U16
REAM
NOTE: BREAK IN GAGE
SEE DETAIL-D
SEE DETAIL-G
FIN.
One coat of soft type petrolatum base rust-proofing compound containing no solvent on interior of member - No shop paint.
5'-1 SEE SEC. C
21'-7 27/32 SEE SEC. B
6'-6
SEE SEC. C.
22'-1 3/32 SEE SEC. B
4'-7 3/4 SEE SEC. C
TOP CHORD - 401U14U16R
LIFT WT. 21 TONS
5'-7
20'-7 27/32
3'-9
21'-1 3/32
5'-1 3/4
M.H. 12x20
M.P.10% TYP.

ZENITH, A. & B. SMITH CO., PGH., PA. J-1103-564

B-81XC

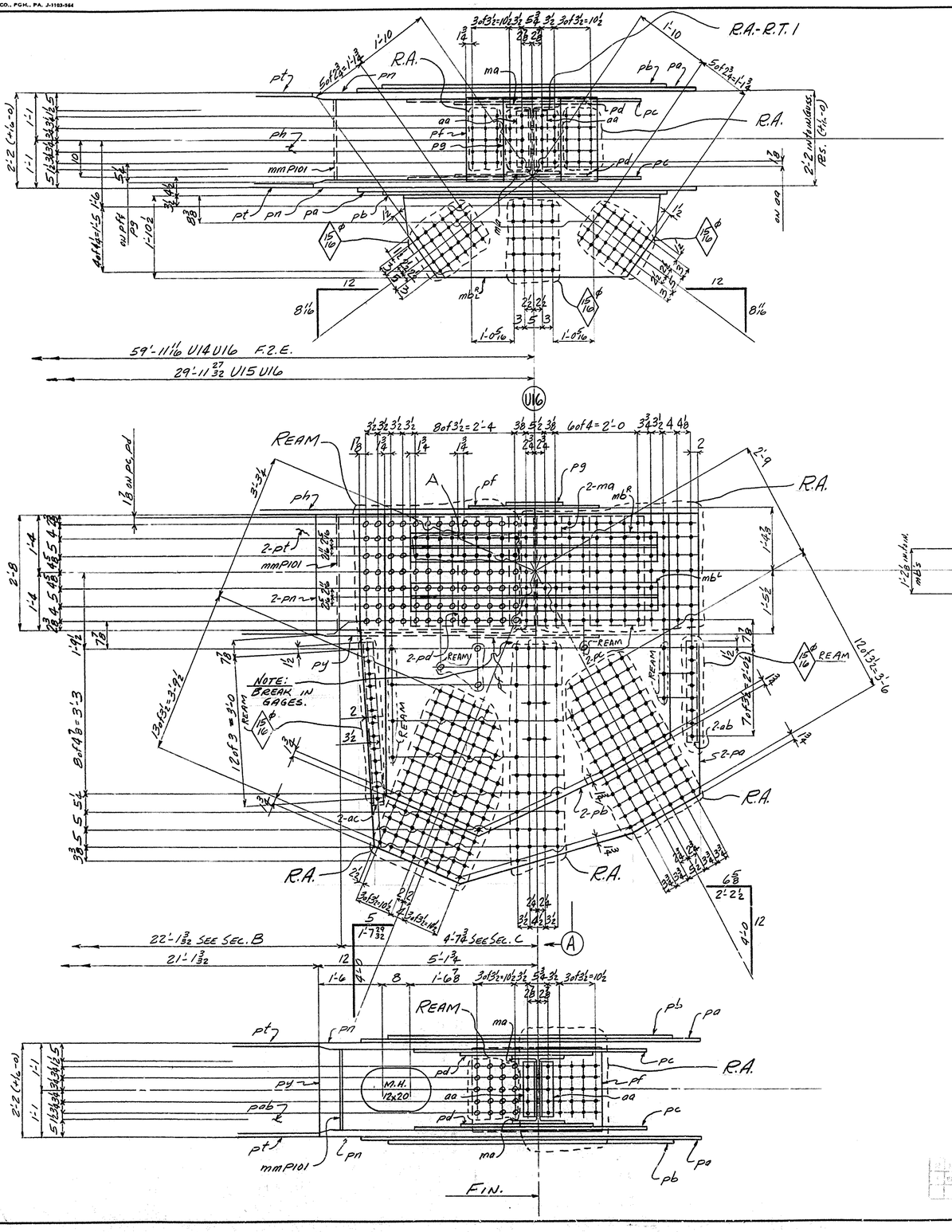

LINE NO.	TOTAL NO. OF PCS. ON ORDER	MATERIAL: NO. OF PCS. ON EACH	ABBRV. DESC.	DIMENSIONS		LENGTH: FEET	LENGTH: INCH	FINISH AND TRIM: DESC.	FINISH AND TRIM: INCH	SHIPPING OR ASSEMBLY MARK	SHIPPING SPECIFICATIONS OR ASSEMBLING REFERENCE	REMARKS	ORDERED	ITEM	CALCULATED WEIGHT FOR ONE SHIP PIECE
1															
2		1	TOP CHORD							401U14U16	103" 64"				
3		1	TOP CHORD							401U14U16	103" 64"				
4															
5		4	PL	97	7/8	8	5			po		A440 E	99 5/16 - 3/64	4040	
6		4	PL	81 1/2	5/8	7	4			pb		A440 E	99 5/16 - 3/64	4051	
7		4	PL	31	5/8	5	7 1/4			pc		A440 E	63 3/8 - 3/64	99233	
8		4	PL	3 1/2	1/2	3	1/4			pd		A440 E	8 3/4 - 3/64	99197	
9		4	PL	23 1/2	5/8	3	1/4			pf		A440 E	5 5/16 - 1/64	99234	
10		2	PL	164	1/2	1	11/2			pg			8 3/4 - 3/64	99165	
11		2	PL	23 1/2	7/8	59	1/16	F2E		ph		A441 E	15 15/16 - 1/64	4068	
12		4	FL	32	2 1/4	5	7	F1E B1E		pk		A441 E		99206	
13		4	PL	32	2 1/4	7	6	B2E		pm		A441 E	84	99206	
14		4	PL	32	2 1/4	5	1/8	F1E B1E		pn		A441 E	20-0	99206	
15		4	PL	32	1/2	20	7 3/32	B2E		pp		A441 E	63 1/4 - 1/64	4052	
16		4	PL	32	1/2	21	1/32	B2E		pf		A441 E	1 1/4 - 1/64	4053	
17		2	PL	23 1/2	1/2	5	7	F1E B1E		pv		A441 E		99201	
18		2	PL	23 1/2	1/2	7	6	B2E		pw		A441 E	84	99201	
19		2	PL	23 1/2	1/2	5	1/8	F1E B1E		py		A441 E	20-0	99201	
20		2	PL	23 1/2	7/8	20	7 3/32	B2E		paa		A441 E	63 1/4 - 1/64	99216	
21		2	PL	23 1/2	7/8	21	1/32	B2E		pab		A441 E	63 1/4 - 1/64	4058	
22		4	PL	24	3/4	4	11/2			pac		A440 E	8 3/4 - 3/64	99149	
23		2	PL	164	1/8	1	1/2			pad			5 5/16 - 1/64	99198	
24															
25															
26															
27	16	8	TCP	7	5/8 S	2	6 3/4			ma401			49-5 1/4	99154	
28		4	TCB	24	7/16	5	1/1			mb^R				9912	
29		4	TCB	10	31	2	0			mc			32-7 1/2	99131	
30															
31		8	L	7	4	1/2	1	4 3/4		oo			40-0	99120	
32		4	L	3 1/2	3 1/2	3/8	2	3 1/2		ab			40-0	99032	
33		4	L	5	3 1/2	1/2	3	3		ac			40-0	99041	
34		8	L	7	4	1/2	1	7		od			40-0	99120	
35															
36															
37		4	FLT	4 3/4	13/16		7			fa				5	
38		4	FLT	7	13/16		7			da			30/33	99121	
39															
40		8	M	BULKHEAD RS.						mmP101		DET. ON P101			
41															
42	32	8	SB	1										5	
43		16	SB	7/8										5	
44															
45															
46															
47															
48															
49															
50															
51															
52															
53															1
54															
55															
56															
57															
58															
59															
60															
61															
62															

TOP CHORD - 401U14U16

NOTES:

ALL MATERIAL TO BE A36 UNLESS NOTED IN REMARKS COLUMN OF SHOP BILL.

All holes may be punched full size except holes noted "RA" are to be sub-punched or sub-drilled 1/4" and reamed to size while assembled. Holes noted "RP" to be sub-punched or sub-drilled 1/4" and reamed to size thru a metal templet. Holes noted "Ream" are to be sub-punched or sub-drilled 1/4" and reamed. In lieu of sub-punching or sub-drilling and reaming, holes may be drilled full size.

Sheared edges of material noted "S" in the remarks column of the shop bill are to be planed to a depth of 1/4" or be machine flame cut. FLAME CUT EDGES OF A440 STEEL TO BE FLAME SOFTENED.

"R" in the tail of a weld symbol denotes radiograph and "MP" Magnetic Particle Inspection.

Open Holes are for High Strength Structural Bolts — NO PAINT within 5" of Holes for High Strength Structural Bolts

1/ϕ RIVETS UNLESS NOTED

11/16/ϕ OPEN HOLES UNLESS NOTED

X-Ray X Magnetic

TOP CHORD - 402 U16 U18R

LIFT WT. 16 TONS

ZENITH, A. & B. SMITH CO., PGH., PA. J-1103-54

D-81XC

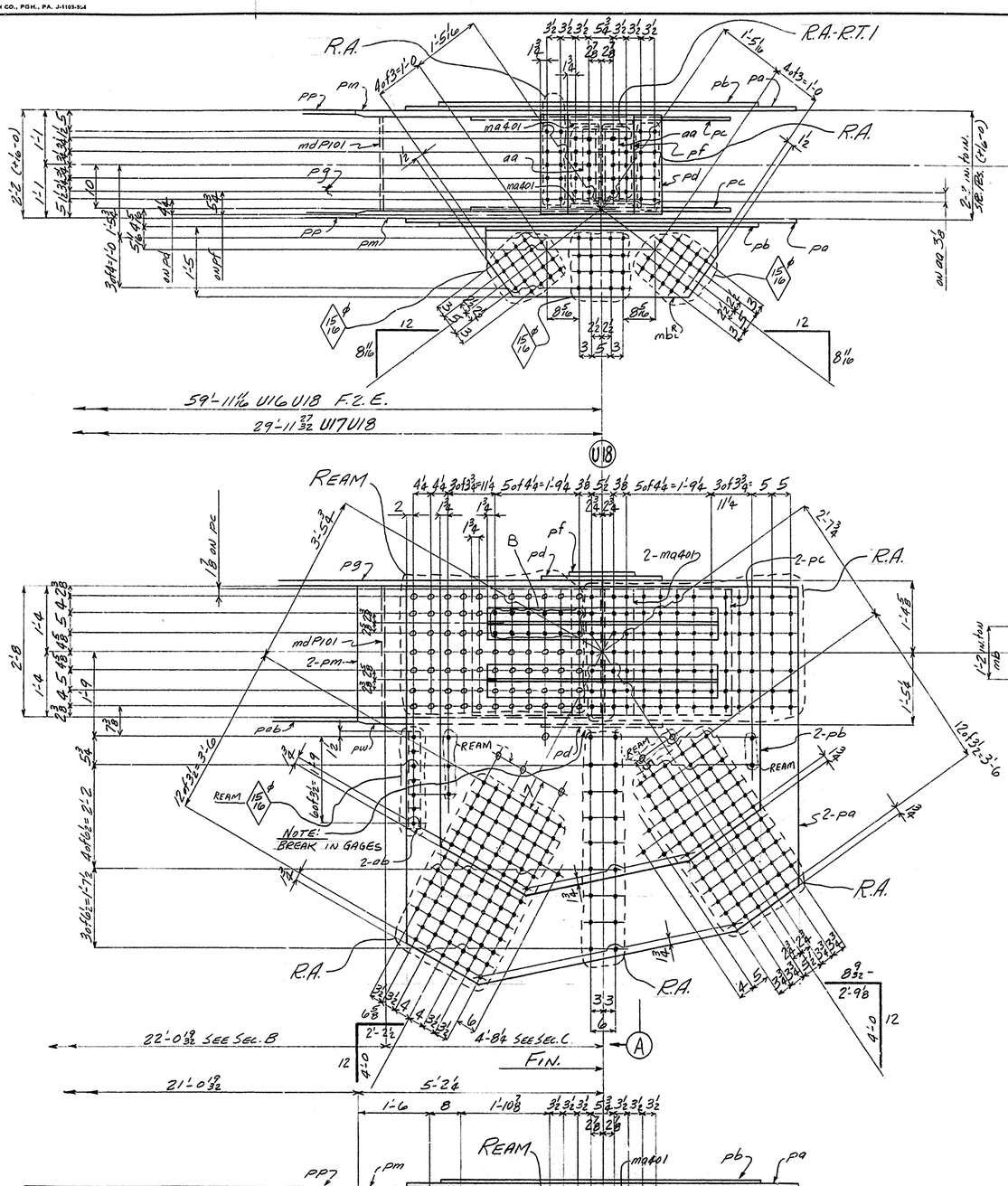

LINE NO.	TOTAL NO. OF PCS. ON ORDER	MATERIAL: NO. OF PCS. ON SKETCH	ABBR. DESC.	DIMENSIONS	LENGTH: FEET	LENGTH: INCH	FINISH AND TRIM: DESC.	FINISH AND TRIM: INCH	SHIPPING OR ASSEMBLING MARK	SHIPPING SPECIFICATIONS OR ASSEMBLING REFERENCE	REMARKS	ORDERED	ITEM	CALCULATED WEIGHT FOR ONE SHIP PIECE
1														
2		1		TOP CHORD					402U16U18		A	99'-65'		
3		1		TOP CHORD					402U16U18		A	99'-65'		
4														
5	4	PL	9 6 1/2	4 9/16	8	3 1/4			pa		A440 E	98'-2 99-4	70444	
6	4	PL	7 5 5/8	2	6	6 1/4			pb		A440 E	77'-0 77-5 1/4	70451	
7	4	PL	31 7/8		5	5 1/4			pc		A440 E	63'-5 63-10	70442	
8	4	PL	24 1/2	1/2	2	6 1/4			pd		A440 E	84'-6 84'-0	70177	
9	2	PL	16 1/4	7/8	2	0 1/2			pf			24'-0 24'-0	70178	
10	2	PL	24 1/2	5/8	59	11/16	F2E		pg		A441 E	59'-11 59-11 3/4	4980	
11	4	PL	32	1/4	4	1/16	F1E B1E		ph		A441 E		70213	
12	4	PL	32	1/4	7	6	B2E		pk		A441 E	8'-6	70213	
13	4	PL	32	1/4	5	2 1/4	F1E B1E		pm		A441 E	20-0	70213	
14	4	PL	32	1	21	3 31/32	B2E		pn		A441 E	15'-4 21-3	70156	
15	4	PL	32	1	21	0 31/32	B2E		pp		A441 E	15'-4 21-3	70155	
16	2	PL	24 1/2	1/4	4	1/16	F1E B1E		pt		A441 E		70213	
17	2	PL	24 1/2	1/4	7	6	B2E		pv		A441 E	8'-6	70213	
18	2	PL	24 1/2	1/4	5	2 1/4	F1E B1E		pw		A441 E	20-0	70213	
19	2	PL	16 1/2	1/8	2	0 1/2			py			28-10 1/4	70130	
20	2	PL	24 1/2	5/8	21	3 31/32	B2E		paa		A441 E	55'-6 21-5	70187	
21	2	PL	24 1/2	5/8	21	0 31/32	B2E		pab		A441 E	55'-6 21-5	70186	
22	4	PL	22 1/2	5/8	4	1/16			pac		A440 E	46'-8 1/4 46-6 3/4	70138	
23														
24														
25														
26														
27														
28														
29	8	TCP	7	585	2	6 3/4			ma401					
30	4	LB	21	6 8	4	9 3/4			mb E			48-6	70116	
31	8	M	BUILT-UP BRS.						md P101		DET. on P101			
32	4	TCB	10	31	1	10 1/2			mc			32-1 1/2	70131	
33														
34	4	FLT	7	13/16		7 1/4			da			30'-33	70131	
35	4	FLT	7	15/16		9			db				70131	
36	4	PL	23 1/2	1/4	1	6 3/8	F1E		dc			24'-0 24-0	70135	
37	4	PL	31	1	3	11/16	F1E		dd			46'-8 46-8	70187	
38	8	L	7	4	1/2	1	7 1/4		aa			40-0	70120	
39	4	L	3 1/2	3 1/2	3/8	2	0		ab			40-0	70132	
40	8	L	7	4	1/2	1	9		ac			40-0	70120	
41														
42														
43														
44														
45														
B 46	12	SB	1											
47	8	SB	7/8											
48														
49														
50														
51														
52														
53														
54														
55														
56														
57														
58														
59														
60														
61														
62														

TOP CHORD-402U16U18

NOTES:

ALL MATERIAL TO BE A36 UNLESS NOTED IN REMARKS COLUMN OF SHOP BILL.

All holes may be punched full size except holes noted "RA" are to be sub-punched or sub-drilled 1/4" and reamed to size while assembled. Holes noted "RT" to be sub-punched or sub-drilled 1/4" and reamed to size thru a metal templet. Holes noted "Ream" are to be sub-punched or sub-drilled 1/4" and reamed. In lieu of sub-punching or sub-drilling and reaming, holes may be drilled full size.

Sheared edges of material noted "E" in the remarks column of the shop bill are to be planed to a depth of 1/4" or be machine flame cut. FLAME CUT EDGES OF A440 STEEL TO BE FLAME SOFTENED.

"R" in the tail of a weld symbol denotes radiograph and "MP" Magnetic Particle Inspection.

Open Holes are for High Strength Structural Bolts [illegible]
NO PAINT within 5" of Holes for High Strength Structural Bolts

ϕ RIVETS UNLESS NOTED 1/16 ϕ OPEN HOLES UNLESS NOTED.

X-Ray ☒ Magnetic

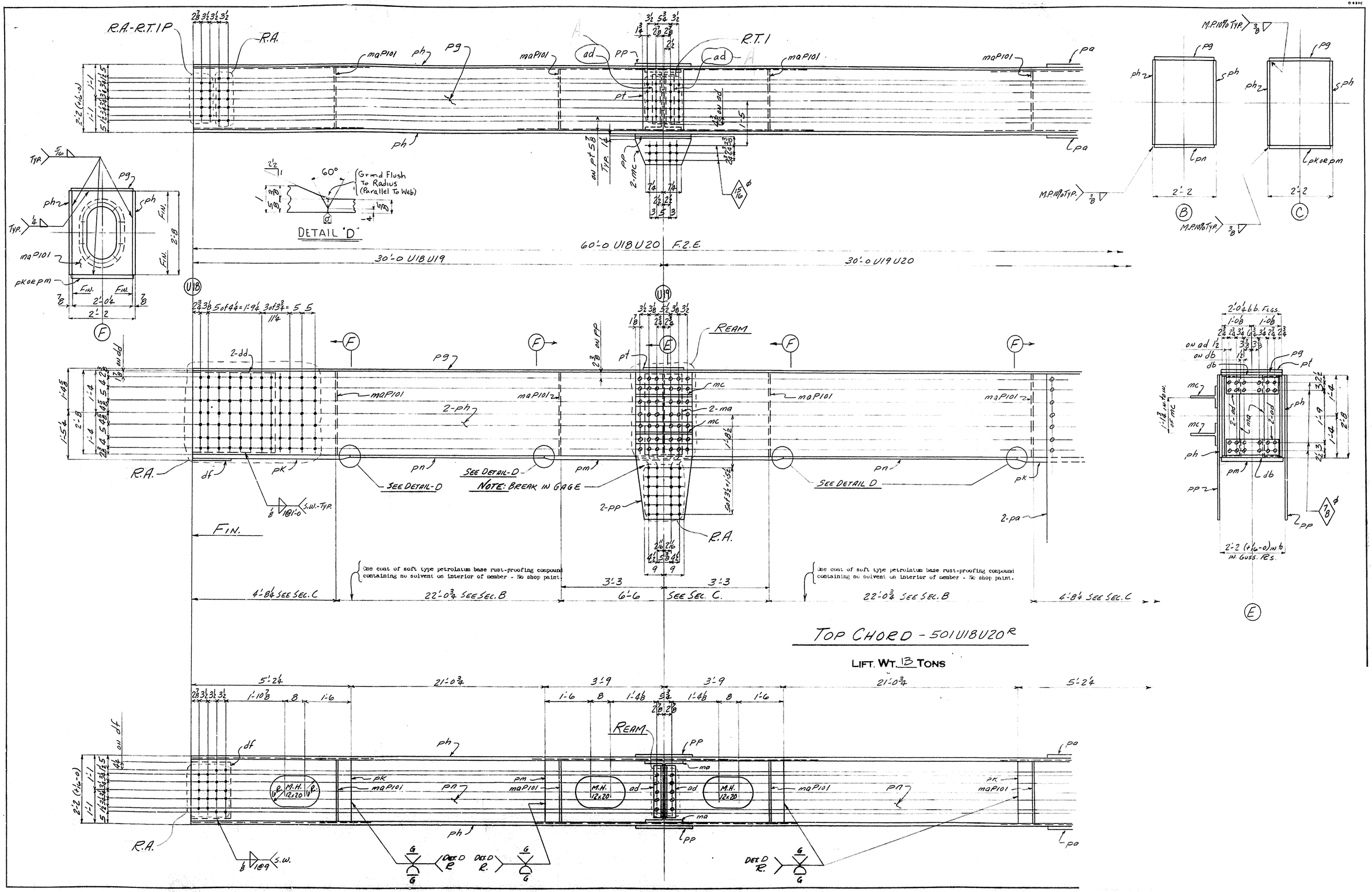
R.A.-R.T.1P
R.A.
R.T.1
maP101
ph
pg
pa
pt
pp
ad
2-mc
DETAIL "D"
60°
Grind Flush To Radius (Parallel To Web)
60'-0 U18U20 F.2.E.
30'-0 U18U19
30'-0 U19U20
U18
U19
REAM
2-dd
2-ph
2-ma
mc
df
pk
pn
pm
2-pp
2-pa
SEE DETAIL-D
NOTE: BREAK IN GAGE
FIN.
S.W.-TYP.
One coat of soft type petrolatum base rust-proofing compound containing no solvent on interior of member - No shop paint.
4'-8¼ SEE SEC. C
22'-0¾ SEE SEC. B
3'-3
6'-6
SEE SEC. C.
M.P.10% TYP.
pk or pm
2'-2
2'-0¼ b.b. FLGS.
2'-2 (+1/16-0) IN. GUSS. RS.
TOP CHORD - 501U18U20R
LIFT. WT. 13 TONS
5'-2¼
21'-0¾
3'-9
M.H. 12x20
DET. D R.
S.W.

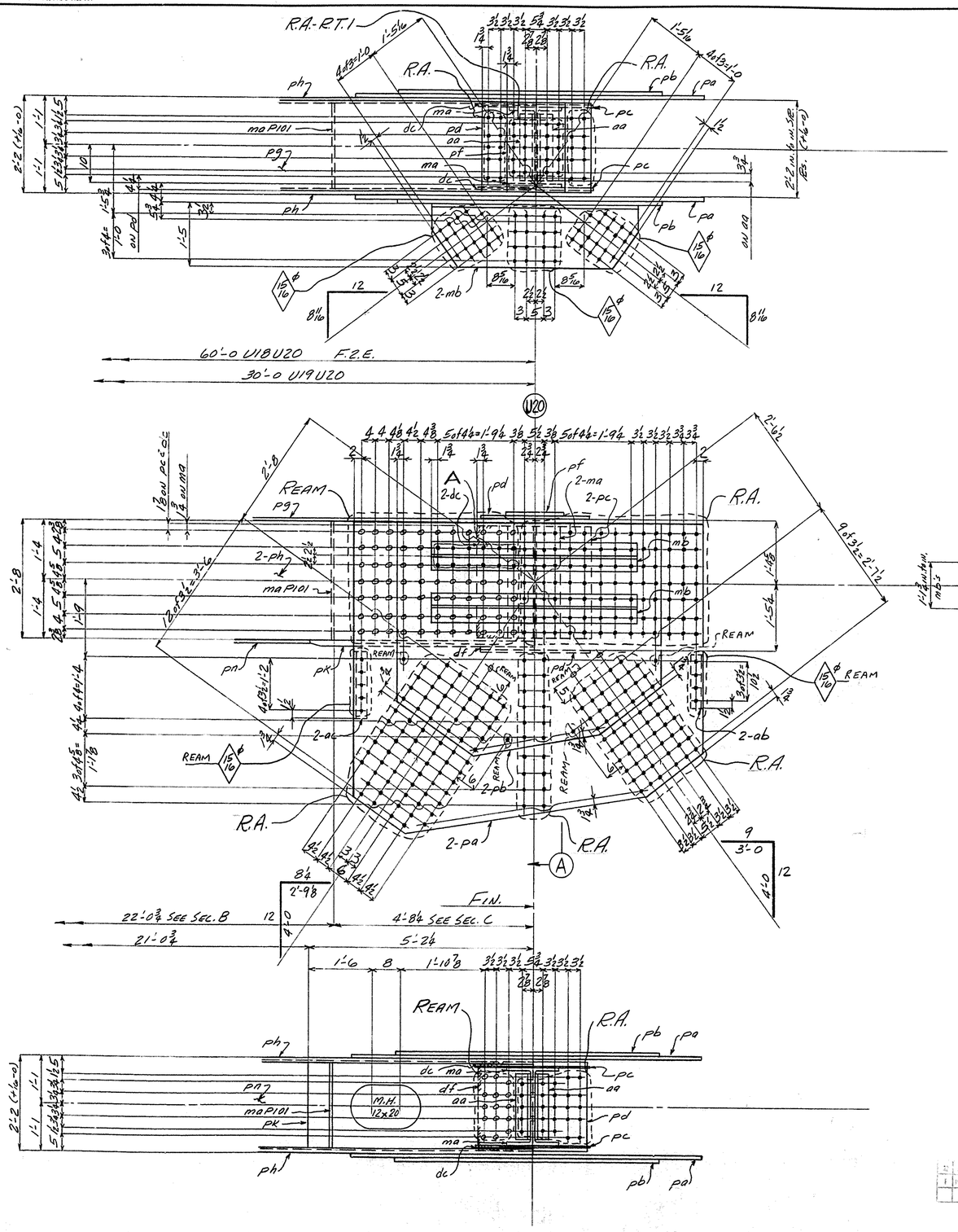

LINE NO.	TOTAL NO. OF PCS. ON SKETCH	MATERIAL: NO. OF PCS. ON ORDER	ABBV. DESC.	DIMENSIONS	LENGTH: FEET	LENGTH: INCH	FINISH AND TRIM: DESC.	FINISH AND TRIM: INCH	SHIPPING OR ASSEMBLING MARK	SHIPPING SPECIFICATIONS OR ASSEMBLING REFERENCE	REMARKS	ORDERED	ITEM	CALCULATED WEIGHT FOR ONE SHIP PIECE
1														
2		1		TOP CHORD					501U18U20		86" 64'			
3		1		TOP CHORD					501U18U20		86" 64'			
4														
5		4	PL	83⅜ ¾	8	1¼			pa		A440 E	85"×33-1¾	46449	
6		4	PL	62⅞ ½	6	1¾			pb		A440 E	64"×25-3¾	99158	
7		4	PL	31 ½	2	8½			pc		A440 E	84"×33-0	99117	
8		4	PL	24½ ½	2	6¼			pd		A440 E		99117	
9		2	PL	16¼ ⅞	2	0⅞			pf			84"×33-0	99088	
10		2	PL	20¾ ⅝	60	0	F2E		pg		A441 E	51"×20-1½	4619	
11		4	PL	32 ⅞	60	0	F2E		ph		A441 E	65"×26-1⅞	4671	
12		4	PL	20¾ 1	5	2¼	F2E B2E		pk		A441 E	84"×33-0	99115	
13		2	PL	20¾ 1	7	6	B2E		pm		A441 E		99115	
14		4	PL	24¾ ⅝	21	10⅜	B2E		pn		A441 E	51"×20-1½	4630	
15		4	PL	22½ ⅝	4	7¾			pp		A440 E	46"×18-3¾	99235	
16		2	PL	16¼ 1⅛	2	0⅞			pt			12-5¾	99129	
17														
18														
19														
20														
21														
22														
23														
24	16	8	TCP	7 5⅝	2	6¾			ma501			49-5¼	99114	
25		4	CB	21 6⅜	4	9¾			mb			45-6	99126	
26	8	4	TCB	10 31	1	10½			mc501			32-7½	99231	
27		8	M	BULKHEAD PLS.					maP101		DET. on P101			X
28														
29		4	FLT	7 13/16		8½			da			30/33	99121	
30		4	FLT	7 13/16		9¾			db				99121	
31		4	SHT	31 ⅛	1	4⅛	F1E		dc			48"×9-0	99145	
32														
33		8	L	7 4 ½	1	8½			aa			40-0	99120	
34		4	L	3½ 3½ ⅜	1	1½			ab			40-0	99132	
35		4	L	3½ 3½ ⅜	1	5			ac				99132	
36		8	L	7 4 ½	1	9¾			ad			40-0	99123	
37														
38		4	PL	31 ⅜	2	8⅝	F1E		dd			84"×30-0	99116	
39		4	PL	24½ ¼	1	3⅜	F1E		df			84"×30-0	99135	
40														
41														
A 42		12	SB	1									5	
43		16	SB	⅞									5	
44														
45														
46														
47														
48														
49														
50														
51														
52														
53														
54														
55														
56														
57														
58														
59														
60														
61														
62														

TOP CHORD-501U18U20

NOTES:

ALL MATERIAL TO BE A36 UNLESS NOTED IN REMARKS COLUMN OF SHOP BILL.

All holes may be punched full size except holes noted "RA" are to be sub-punched or sub-drilled 1/4" and reamed to size while assembled. Holes noted "RT" to be sub-punched or sub-drilled 1/4" and reamed to size thru a metal templet. Holes noted "Ream" are to be sub-punched or sub-drilled 1/4" and reamed. In lieu of sub-punching or sub-drilling and reaming, holes may be drilled full size.

Sheared edges of material noted "E" in the remarks column of the shop bill are to be planed to a depth of 1/4" or be machine flame cut. FLAME CUT EDGES OF A490 STEEL TO BE FLAME SOFTENED.

"R" in the tail of a weld symbol denotes radiograph and "MP" Magnetic Particle Inspection.

Open Holes are for High Strength Structural Bolts [redacted] NO PAINT within 5" of Holes for High Strength Structural Bolts

1/φ RIVETS UNLESS NOTED

11/16 φ OPEN HOLES UNLESS NOTED

X-Ray X Magnetic

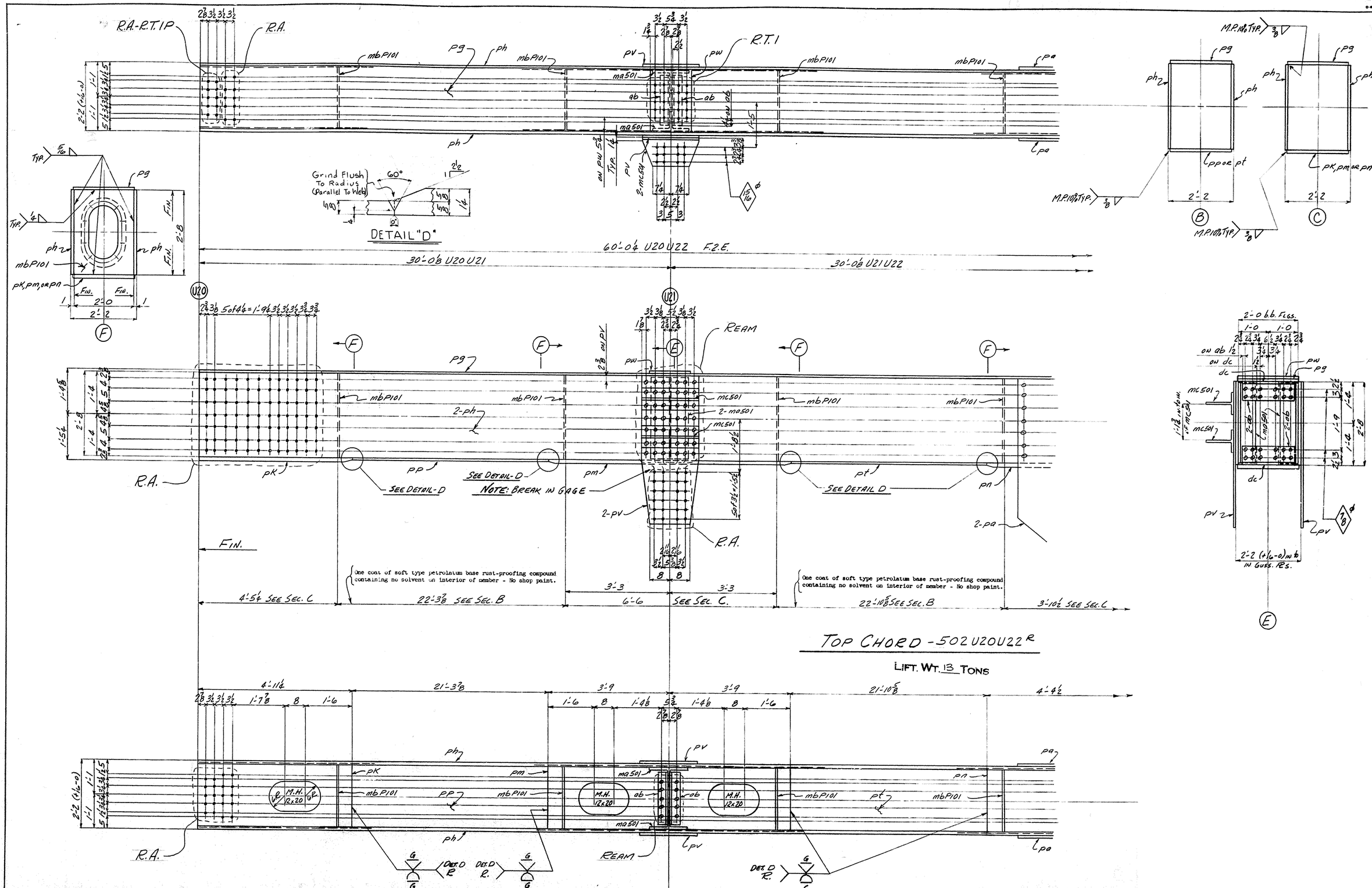
R.A.-R.T.1P
R.A.
R.T.1
mbP101
pg
ph
pv
pw
pa
ma501
ab
2-mc501
Grind Flush To Radius (Parallel To Web)
60°
DETAIL "D"
60'-0¼ U20U22 F.2.E.
30'-0⅛ U20U21
30'-0⅛ U21U22
U20
U21
REAM
mc501
2-ma501
2-ph
2-pv
2-pa
pk
pp
pm
pt
pn
SEE DETAIL-D
NOTE: BREAK IN GAGE
FIN.
One coat of soft type petrolatum base rust-proofing compound containing no solvent on interior of member - No shop paint.
4'-5¼ SEE SEC. C
22'-3⅞ SEE SEC. B
3'-3
6'-6
SEE SEC. C.
22'-10⅝ SEE SEC. B
3'-10½ SEE SEC. C
M.P.10% TYP.
pp or pt
pk, pm or pn
2'-2
2'-0 b.b. FLGS.
on ab
on dc
dc
2'-2 (+1/16-0) in to in GUSS. RS.
TOP CHORD - 502 U20U22R
LIFT. WT. 13 TONS
4'-11¼
21'-3⅞
3'-9
21'-10⅝
4'-4½
M.H. 12x20
DET. D R.
G

ZENITH, A. & D. SMITH CO., PGH., PA. J-1103-564

B-81XC

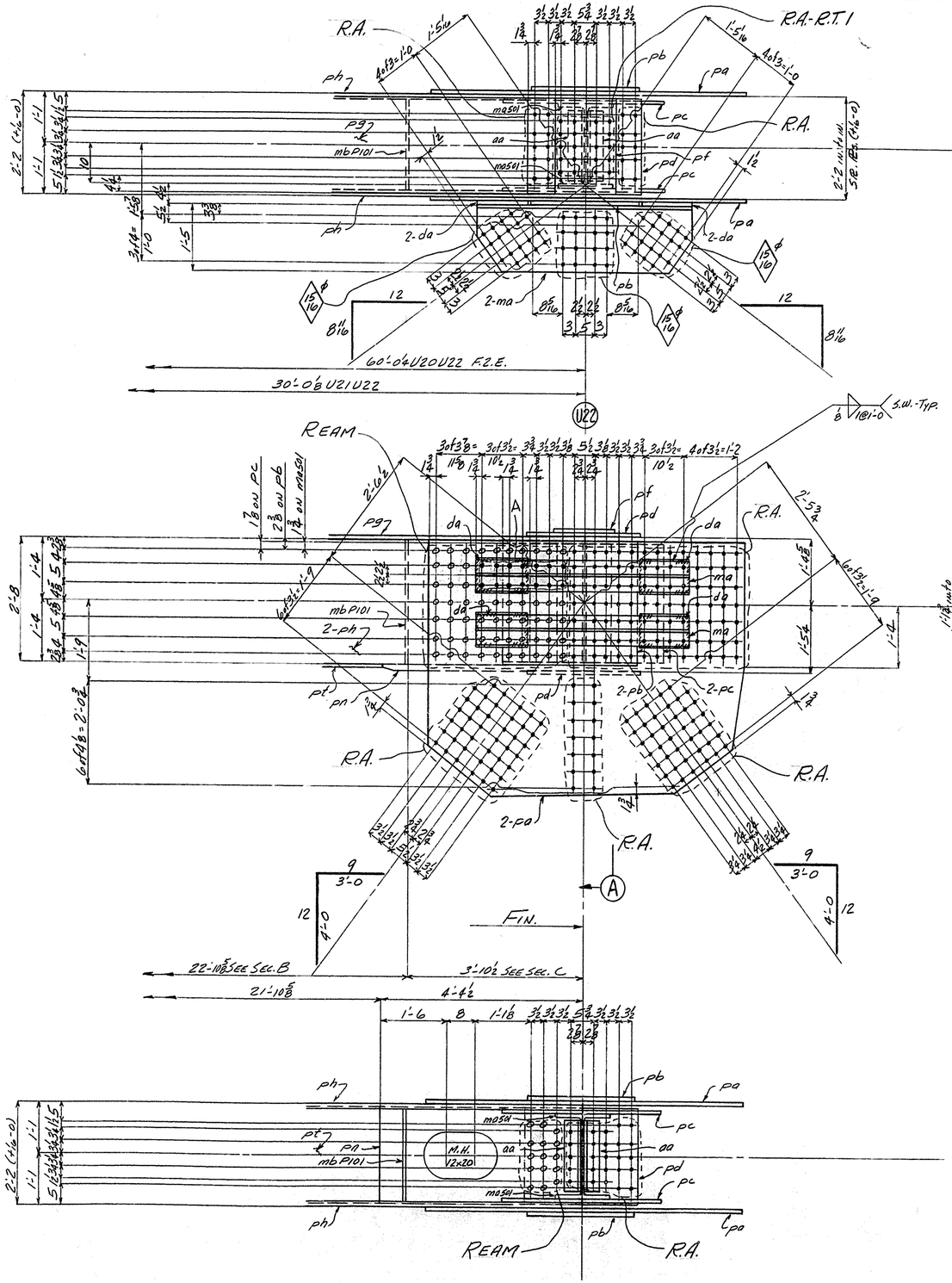

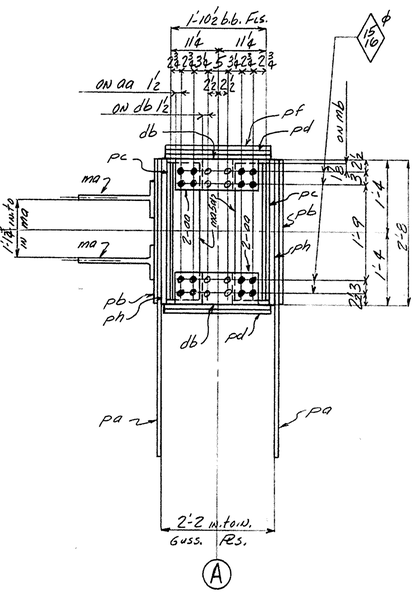

LINE NO.	TOTAL NO. OF PCS. ON ORDER	MATERIAL: NO. OF PCS. ON SKETCH	ABBRV. DESC.	DIMENSIONS	LENGTH: FEET	LENGTH: INCH	FINISH AND TRIM: DESC.	FINISH AND TRIM: INCH	SHIPPING OR ASSEMBLING MARK	SHIPPING SPECIFICATIONS OR ASSEMBLING REFERENCE	REMARKS	ORDERED	ITEM	CALCULATED WT-CWT FOR ONE SHIP PIECE
1														
2		1		TOP CHORD					502U20U22 E		67" 64'			
3		1		TOP CHORD					502U20U22 W		67" 64'			
4														
5		4	PL	65 7/8	6	11/16			pa		A440 E 67"x 2'-3 3/4	4042		
6		4	PL	32 5/8	2	5 4			pb		A440 E 65 3/4"x 34'-10 3/4	99231		
7		4	PL	31 3/4	3	7 3/4			pc		A440 E 55 3/4"x 34'-7 3/4	99247		
8		4	PL	24 1/2 1/2	2	6 4			pd		A440 E 57"x 3'-0	99177		
9		2	PL	16 4 7/8	2	0 1/2			pf		E 84"x 36'-0	99238		
10		2	PL	24 1/2 5/8	60	0 4	F2E		pg		E 59 5/8"x 60'-2	4019		
11		4	PL	32 1	60	0 4	F2E		ph		E 63 3/4"x 60'-2	99230		
12		2	PL	24 3/8 1/4	4	1 1/16	F2E B2E		pk		E	99195		
13		2	PL	24 1/2 1/4	7	6	B2E		pm		E 84"x	99196		
14		2	PL	24 1/2 1/4	4	4 1/2	F2E B2E		pn		E 20"x	99195		
15		2	PL	24 3/8 5/8	21	3 3/8	B2E		pp		E 23 3/4"x 34'-7	99172		
16		2	PL	24 1/2 5/8	21	10 3/8	B2E		pt		E 56 7/8"x 32'-0	99173		
17		4	PL	22 1/2 5/8	4	7 1/2			pv		A440 E 43 1/4"x 25'-2 3/4	99237		
18		2	PL	16 1/2 1 3/8	2	0 1/2			pw			25-10 4	99130	
19														
20		4	CB	21 6B	4	9 3/4			ma			45-6	99126	
21		8	TLP	7 58.5	2	6 3/4			ma501					
22		4	TLB	10 31	1	10 1/2			mc501					
23														
24														
25		8	PL	8 3/4 5/8	1	2			da			84"x 32'-0	99146	
26		4	FLT	7 1 3/16		8			db			30/23	99121	
27		4	FLT	7 1 9/16		9 1/2			dc				99121	
28														
29														
30		8	L	7 4 1/2	1	8			aa			40-0	99120	
31		8	L	7 4 1/2	1	9 1/2			ab				99120	
32														
33														
34		8	M	BULKHEAD Rs.					mbP101		DET. on P101		X	
35														
36														
37		12	SB	1									S	
38														
39														
40														
41														
42														
43														
44														
45														
46														
47														
48														
49														
50														
51														
52														
53														
54														
55														
56														
57														
58														
59														
60														
61														
62														

TOP CHORD - 502U20U22

NOTES:

ALL MATERIAL TO BE A36 UNLESS NOTED IN REMARKS COLUMN OF SHOP BILL.

All holes may be punched full size except holes noted "RA" are to be sub-punched or sub-drilled 1/4" and reamed to size while assembled. Holes noted "RT" to be sub-punched or sub-drilled 1/4" and reamed to size thru a metal templet. Holes noted "Ream" are to be sub-punched or sub-drilled 1/4" and reamed. In lieu of sub-punching or sub-drilling and reaming, holes may be drilled full size.

Sheared edges of material noted "E" in the remarks column of the shop bill are to be planed to a depth of 1/4" or be machine flame cut. FLAME CUT EDGES OF A440 STEEL TO BE FLAME SOFTENED.

"R" in the tail of a weld symbol denotes radiograph and "MP" Magnetic Particle Inspection.

Open Holes are for High Strength Structural Bolts [redacted] NO PAINT within 5" of Holes for High Strength Structural Bolts

1/16 OPEN HOLES UNLESS NOTED

1/16 RIVETS UNLESS NOTED

X-Ray X Magnetic

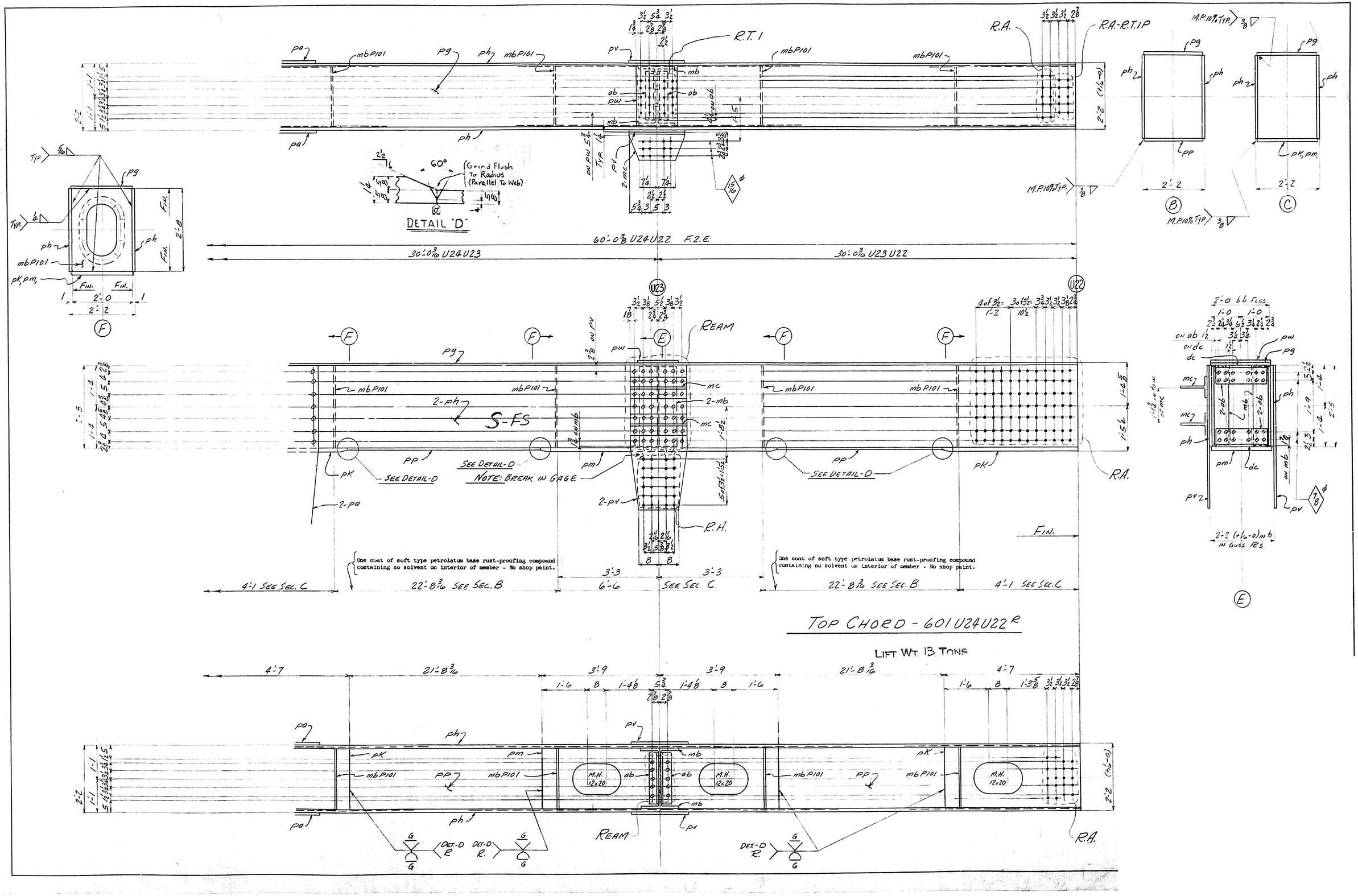

R.T.1
R.A.
R.A.-R.T.1P
DETAIL "D"
(Grind Flush To Radius (Parallel To Web)
60°
60'-0 3/8 U24U22 F.2.E.
30'-0 3/16 U24U23
30'-0 3/16 U23U22
REAM
S-FS
SEE DETAIL-D
NOTE: BREAK IN GAGE
R.A.
FIN.
One coat of soft type petrolatum base rust-proofing compound containing no solvent on interior of member - No shop paint.
4'-1 SEE SEC. C
22'-8 3/16 SEE SEC. B
6'-6
SEE SEC. C.
TOP CHORD - 601U24U22R
LIFT WT. 13 TONS
21'-8 3/16
M.H. 12x20
DET.-D R.

ZENITH, A. & D. SMITH CO., PGH., PA. J-1103-564

D-BXC

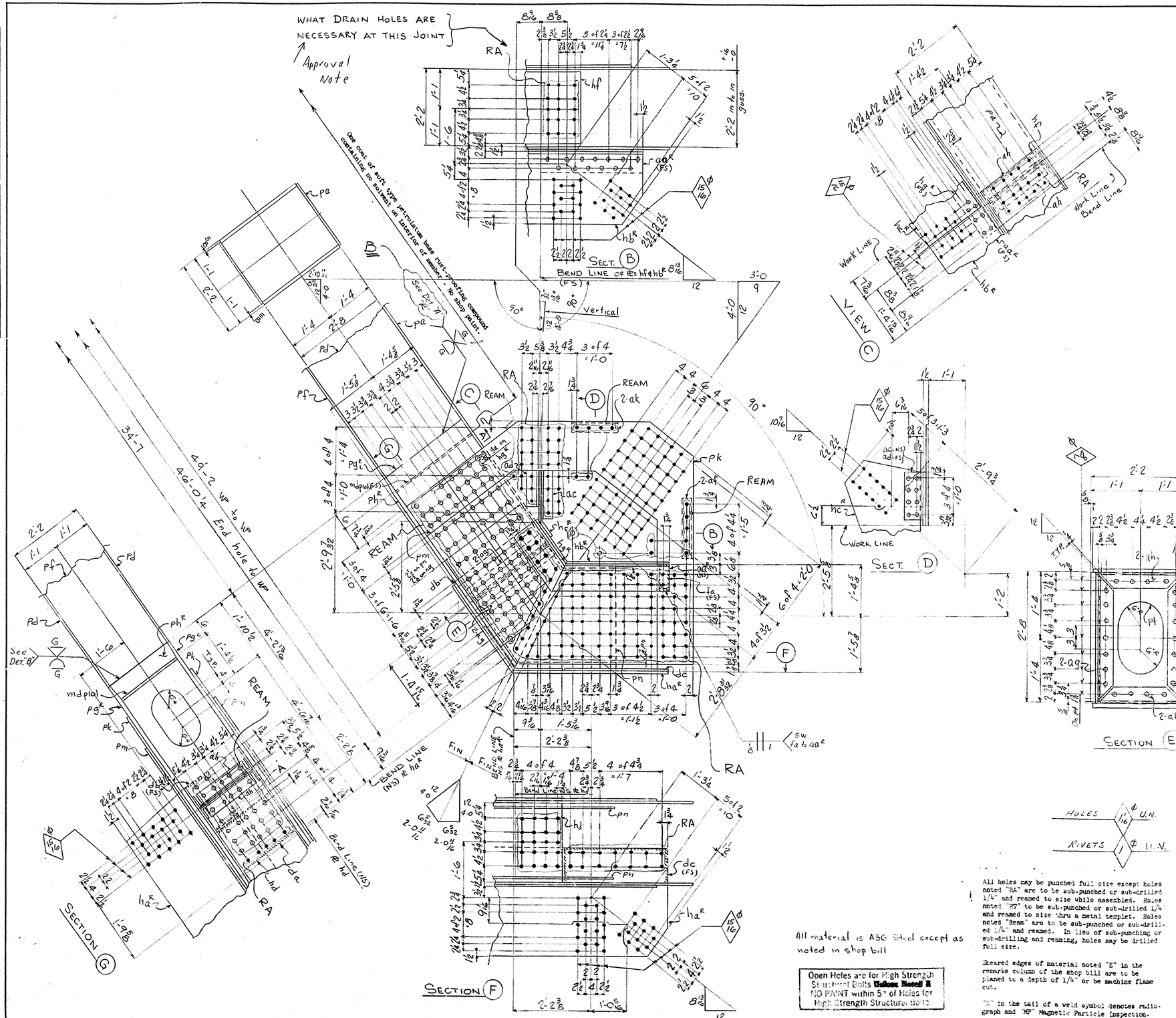

LINE NO.	TOTAL NO. OF PCS. ON ORDER	MATERIAL: NO. OF PCS. ON SKETCH	ABBRV. DESC.	DIMENSIONS	LENGTH: FEET	LENGTH: INCH	FINISH AND TRIM: DESC.	FINISH AND TRIM: INCH	SHIPPING OR ASSEMBLING MARK	SHIPPING SPECIFICATIONS OR ASSEMBLING REFERENCE	REMARKS	ORDERED	ITEM	CALCULATED WEIGHT FOR ONE SHIP PIECE
1														
2	1		END DIAGONAL						103UOLI^{R}		90¾ x 50			
3	1		END DIAGONAL						103UOLI^{L}		90¾ x 50			
4														
5	2	PL	24⅜	⅝	45	5¾	F1E		pa		E	89¾ x 45-7¾	1020	
6	4	PL	32	¼	5	11¼	B1E		pb^{R}		E	54¾ 30-0	1058	
7	2	PL	24⅜	⅛	5	4⅛			pc		E	54¾ 12-0	1060	
8	4	PL	32	⅞	34	7			pd		E	65¾ 34-8½	1028	
9	2	PL	24⅜	⅝	34	7			pf		E	5034 51-7½	1033	
10	4	PL	32	¼	6	4	B1E F1E		pg^{L}		E	84¾ 30-0	1069	
11	2	PL	24⅜	⅛	6	4⅛	B1E F1E		ph^{L}		E	84¾ 12-0	1055	
12	4	PL	794	¾	8	0⅛			pk		Guss A440 E	1010¾ 33-0¾	1045	
13	4	PL	63	¾	6	5⅛			pm		Guss A440 E	68¾ 26-2¾	1048	
14	4	PL	45⅞	¾	4	4⅛			pn		A440 E	46¾ 15-5¾	1015	
15	2	PL	354	⅝	7	0	Bend		ha^{L}			54¾ 32-0	1062	
16	2	PL	224	⅝	4	3⅜	Bend		hb^{L}				1053	
17	2	L	8	6	½	3	2⅝	F1E	aa^{R}			30-0	1065	
18	2	PL	21⅜	½	1	3⅜	Bend	F1ED	hg^{R}			54¾ 30-0	1059	
19	4	M	Bulkheads						md P101		Del on Sht. P101			X
20	2	L	6	4	⅜	1	3½		ac			30-0	1024	
21	2	L	6	4	⅜		11½		ad				1024	
22	2	PL	25⅜	½		2	3⅜	Bend	hc^{L}			84¾ 30-0	1049	
23	4	L	3½	3½	⅜	1	8½		af			30-0	1049	
24	2	PL	21½	7/16		2	7½		pf			84¾ 30-0	1030	
25	8	L	4	3½	⅜	2	6¾		ag			110-0	1031	
26	8	L	4	3½	⅜	1	8¾		ah				1031	
27	2	SHT	24⅜	⅜		1	4⅜	F1E	de			72¾ 30-0	1047	
28	2	PL	24⅜	⅝		2	0⅜	BEND	hd		A440 E	69¾ 22-0	1051	
29	2	PL	24⅜	½		2	2	BEND	hf		A440 E	54¾ 30-0	1048	
30	4	L	3½	3½	⅜	1	3½		ak			30-0	1049	
31	2	FLT	3½	¾			8		fa			84¾ 30-0	1031	
32	2	PL	10⅜	¾		1	5⅜		db				1034	
33	4	PL	32	1		1	10½		pv		E	95¾ 16-0	1067	
34	4	PL	32	½		1	11½		rw		A440 E	64¾ 40-0	1068	
35	2	PL	10⅜	⅝		2	9⅜		dc			64¾ 30-0	1062	
36														
37														
38														
39														
40	16	58	1	R										
41	16	58	7	8	R									
42														
43														
44														
45														
46														
47														
48														
49														
50														
51														
52														
53														
54														
55														
56														
57														
58														
59														
60														
61														
62														

END DIAGONAL 103UO-LI^{R}

X-Ray

NOTE: Break in Gage

Typ - MP 10⅞

SECT. E

SECT. D

1-10 in to in Rₒ

2-aa pt 2-ab 2-ac 2-ad 2-pp 2-pm 2-pf 2-pg 2-pa 2-pb 2-pc 2-pd 2-py 2-pv 2-pw

2-8 L.L. Ct

M.H. 12 x 18

Rivets - N.S.

md P101

pkᴱ N.S.
pbkᴱ F.S.

REAM

RA

See Det. "A" "R"

See Det. "B" "R"

See Sect. "E"

See Sect. "D"

One coat of soft type petrolatum base rust-proofing compound containing no solvent on interior of member - No shop paint.

FIN

NOTE: Break in gage

2-2 Ot.O Webs (+½-0)

f in fₒ in Guss.

59-11¾

29-11⅞

6-8¼ 20-5⅞ 3-6 5-6 19-6⅞

6-8⅞ 20-5⅞ 3-6 5-6 19-6⅞

5-6¼ 21-5⅞ 2-11¾ 5-0¼ 20-6⅞

6-0 8¼ 2-11¾ 5-0¼ 20-6⅞

BOTTOM CHORD 104 L1-L3ᴿ

LIFT WT. 16 TONS

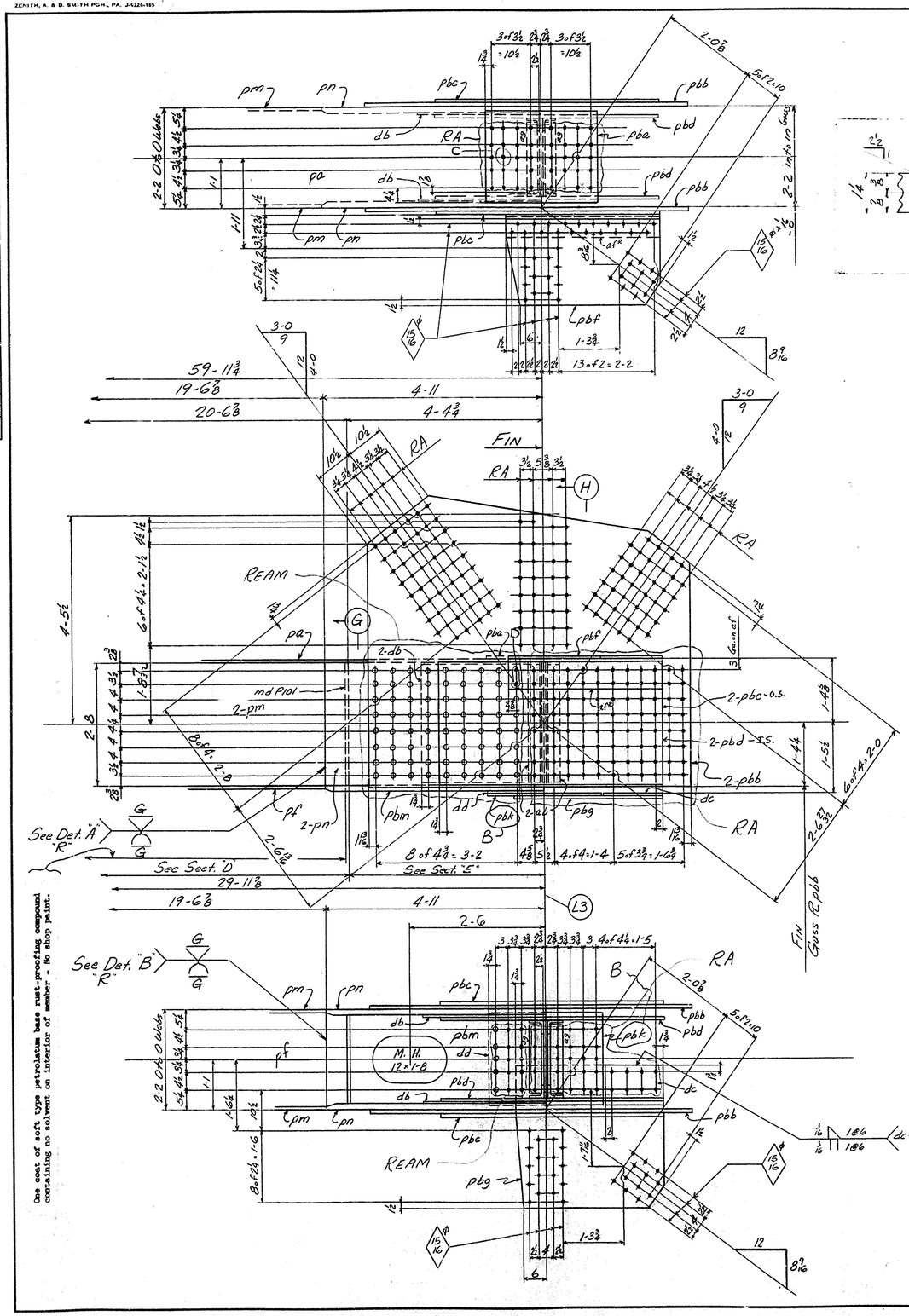

One coat of soft type petrolatum base rust-proofing compound containing no solvent on interior of member - No shop paint.

NOTES:

All holes may be punched full size except holes noted "RA" are to be sub-punched or sub-drilled 1/4" and reamed to size while assembled. ~~Holes noted "RA" are to be sub-punched or sub-drilled 1/4" and reamed to size while assembled.~~ Holes noted "Ream" are to be sub-punched or sub-drilled 1/4" and reamed. In lieu of sub-punching or sub-drilling and reaming, holes may be drilled full size.

Sheared edges of material noted "E" in the remarks column of the shop bill are to be planed to a depth of 1/4" or be machine flame cut. A440 Steel to be flame softened.

"F" in the tail of a weld symbol denotes radiograph and "MP" Magnetic Particle Inspection.

All material is A36 steel except as noted in shop bill.

Rivets U.N.
Open Holes U.N.

Open Holes are for High Strength Structural Bolts ~~Unless Noted A~~
NO PAINT within 5" of Holes for High Strength Structural Bolts

LINE NO.	TOTAL NO. OF PCS. ON ORDER	MATERIAL: NO. OF PCS. ON SKETCH	ABBRV. DESC.	DIMENSIONS	LENGTH: FEET	LENGTH: INCH	FINISH AND TRIM: DESC.	FINISH AND TRIM: INCH	SHIPPING OR ASSEMBLING MARK	SHIPPING SPECIFICATIONS OR ASSEMBLING REFERENCE	REMARKS	ORDERED	ITEM	CALCULATED WEIGHT FOR ONE SHIP PIECE
1		1		Bottom Chord					104Li-L3E	72 x 64				
2		1		Bottom Chord					104Li-L3E					
3														
4		2	PL	24 3/8	5/8	59 3/4	FIE		pa		Cov E	57 1/8 x 59.5	1015	
5		2	PL	24 3/8	1/4	6 8 3/8	FIE/BIE		pb		Cov E	8 1/4 x 20-0	9769	
6		2	PL	24 3/8	5/8	20 5 3/8	B2E		pc		Cov E	10 3/8 x 20-2 1/4	9758	
7		2	PL	24 3/8	1/4	9 0	B2E		pd E		Cov E	8 1/4 x 20-0	9759	
8		2	PL	24 3/8	5/8	19 6 3/8	B2E		pf		Cov E	10 3/8 x 20-1	9767	
9		2	PL	24 3/8	1/4	4 11	FIE/BIE		pbm		Cov E	8 1/4 x 20-0	9759	
10		4	PL	32	1/4	6 8 3/4	FIE/BIE		pb E		Web E		9769	
11		4	PL	32	5/8	20 5 3/8	B2E		pg		Web E	6 5 3/8 x 20-2 1/4	1027	
12		2	PL	32	1/4	9 0	B2E		pk E		Web E	8 1/4 x 20-0	9759	
13		4	PL	32	5/8	19 6 3/8	B2E		pm		Web E	6 3/8 x 20-2 1/4	1029	
14		4	PL	32	1/4	4 11	FIE/BIE		pn		Web E	8 1/4 x 20-0	9759	
15	6	4	PL	16	1/2	3 10 3/8			pp104		Guss	8 x 33-0	9769	
16		2	PL	32	1/4	9 0	B2E		pbk E		Web E	8 1/4 x 20-0	9759	
17		2	PL	21 3/8	1/16	2 7 1/2			pt			8 1/4 x 30-0	9783	
18		8	L	4	3 1/2	3/8 / 1	8 3/8		aa			40-0	9701	
19	40	24	L	4	3 1/2	3/8 2	6 3/8		ab104				11701	
20		2	PL	23	7/16	2 7 1/2			pv			8 1/4 x 30-0	9783	
21		8	L	4	3 1/2	3/8 / 1	10 1/2		ac			40-0	9701	
22	2 R 2 L	2	L	8	6	7/16 3	1 3/8		ad104 E			40-0	9786	
23	4	2	FLT	7 3/8	1/2	1 9 E			da104		F1	8 1/4 x 30-0	9765	
24	4	2	PL	22 1/4	3/8	3 1 3/8			pw104			8 1/4 x 30-0	9783	
25	4	2	PL	35	3/8	3 1 3/4			py104				9783	
26	(2)	2	PL	24	1/2	2 6			pba		A440 E	8 1/4 x 40-0	9786	B
27		4	PL	74 1/2	3/8	7 2 E	FIED		pbb		Sim (A440) E	12 1/4 x 20-2 1/4	1035	
28		4	PL	32	5/8	5 0 6			pbc		A440 E	33 1/4 x 34-10 1/4	9768	
29		4	PL	31	5/8	2 8 6	F1E		db		F1	8 1/4 x 30-0	9783	
30		4	PL	31	1/2	5 0 6			pbf		A440 E	33 1/4 x 34-10 1/4	9768	
31		2	PL	22 1/2	3/8	3 6			pbf			8 1/4 x 30-0	9783	
32		2	PL	36 1/2	3/8	3 4 1/2			pbg				9783	
33		2	PL	10 1/2	1/2	1 4 E			dc		F1	8 1/4 x 30-0	9769	
34		2	L	8	6	7/16 3	6		af E			40-0	9784	
35		2	PL	24	1/4	1 3	F1E		dd		F1	8 1/4 x 30-0	9769	
36		2	PL	20	1/2	2 7 1/2			pbh			8 1/4 x 30-0	9783	
37		8	L	4	3 1/2	3/8 / 1	7 1/2		ag			40-0	9701	
38		2	PL	24	1/2	2 6			pbk		A440 E	8 1/4 x 40-0	9786	B
39														
40		8	M	Bulkheads					md P101		Det. to P101			X
41														
42														
43	(20)	5B		1 9										5
44		3	5B	8 9										5
45														
46														
47														
48														
49														
50														
51														
52														
53														
54														
55														
56														
57														
58														
59														
60														
61														
62														

Bottom Chords 104 Li-L3E

NOTE: Break in gage

2.2 Oh.O webs (1'-0")

RA

pk pm pa pb^R pc pd^R pf pn^R pp pv

mh P101

PP104 pbg^R da104 ad104^R pw104 py104

1-11⅛

5 of 2-10

SECT. "G"

SECT. "F"

5-8 | 20-9 27/32 | 3-6 | 5-6 | 18-11 27/32

5-2¼ | 21-9 27/32 | 2-11¾ | 5-0¼ | 19-11 27/32

59-11⅛

FIN

See Det. "D" R

See Det. "A" R

See Det. "F"

See Det. "G"

2-pk 2-pm 2-pp

2-ab104 2-ad104

Rivets-N.S.

REAM

pbg^R-F.S. pn^R-N.S.

One coat of soft type petrolatum base rust-proofing compound containing no solvent on interior of member - No shop paint.

M.H 12 x 1-8 (Typ)

L3 L4

2-2 into in Grass (1'-0")

BOTTOM CHORD 105 L3-L5^R

LIFT WT. 17 TONS

ZENITH, A. & D. SMITH PGH., PA. J-4226-165

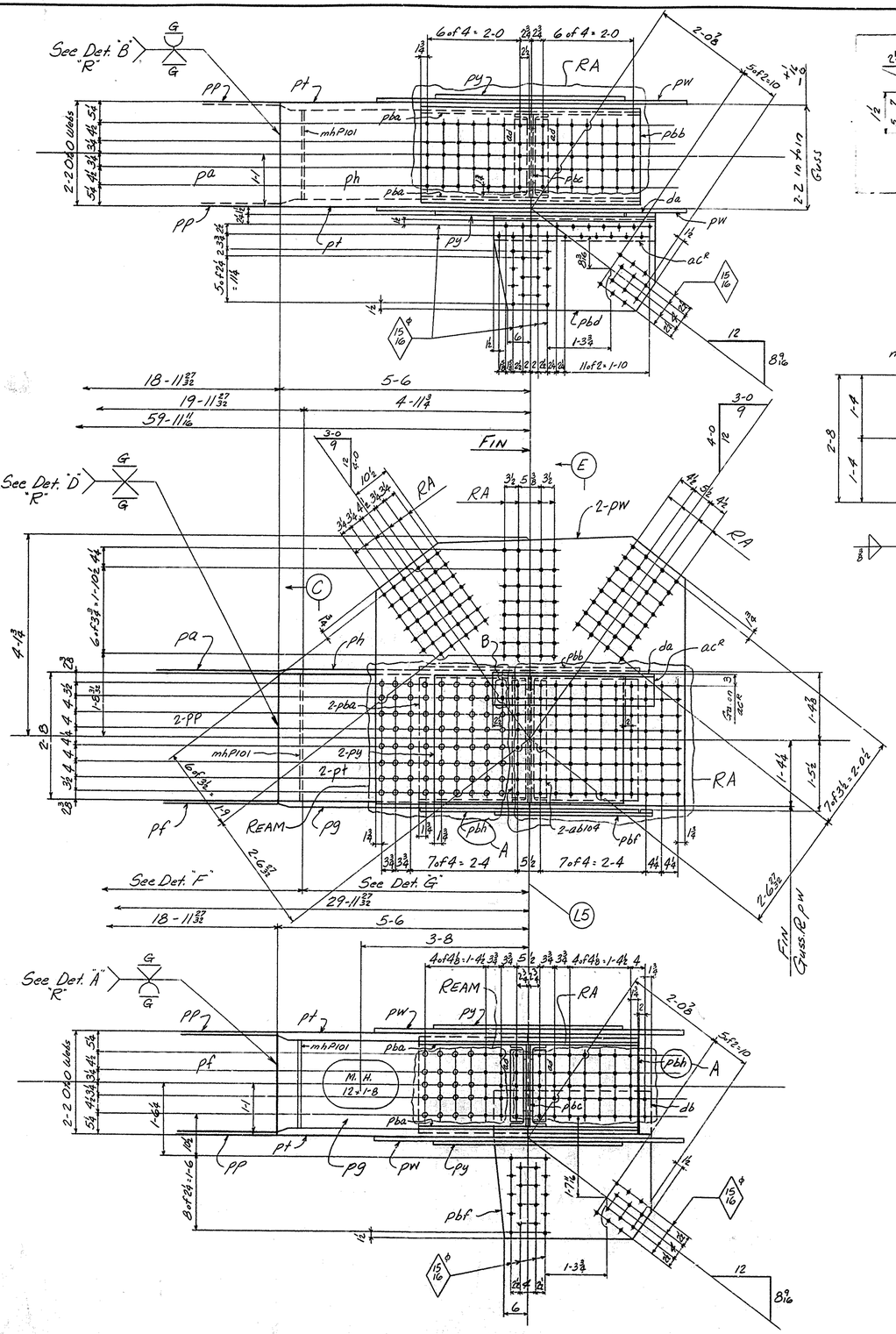

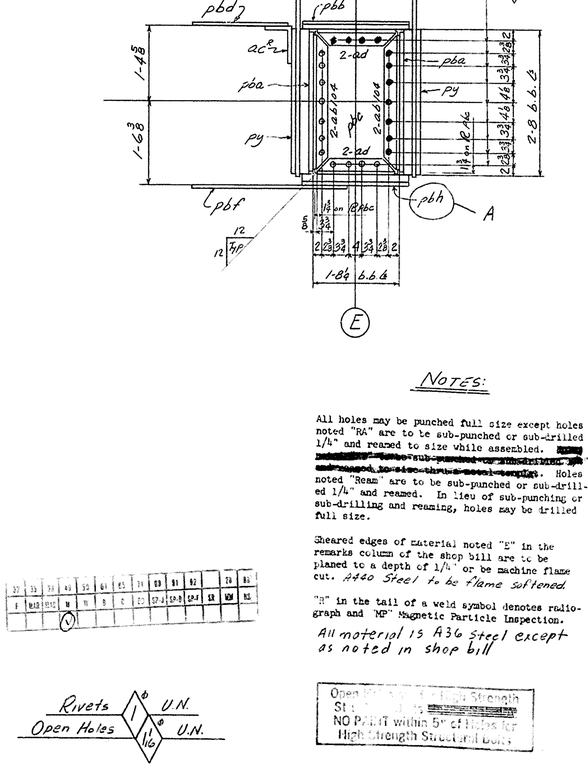

NOTES:

All holes may be punched full size except holes noted "RA" are to be sub-punched or sub-drilled 1/4" and reamed to size while assembled. [illegible] sub-punched or sub-drilled 1/4" and reamed, to size thru a steel template. Holes noted "Ream" are to be sub-punched or sub-drilled 1/4" and reamed. In lieu of sub-punching or sub-drilling and reaming, holes may be drilled full size.

Sheared edges of material noted "S" in the remarks column of the shop bill are to be planed to a depth of 1/4" or be machine flame cut. A440 Steel to be flame softened.

"B" in the tail of a weld symbol denotes radiograph and "MP" Magnetic Particle Inspection.

All material is A36 steel except as noted in shop bill

Rivets 1 1/16 U.N.
Open Holes 1 1/16 U.N.

Open [illegible] Strength St[illegible] NO PAINT within 5" of [illegible] High Strength Structural Bolts

PAINT: Yes, U.N.
SHOP CONTACT SURFACES: No

FAB PLT.	01	SEQ. CODE	36461
BILLED	NO. CHGS.	COST CENTERS PROD.	NON PROD.	PAY BASIS CODE
		90		15
WEIGHT REL. NO.	EXCEPTION SHIP DIVISION		LINE CONTROL	
				37

FOR LOCATION OF SHIPPING PIECES SEE ERECTION PLANS

X-Ray ☑ Magnetic Particle ☑ ADV. BILL 106

Job 9013 A Shield Ln 44 X 1 X 30-0 P/99051

D EXC

LINE NO.	TOTAL NO. OF PCS ON ORDER	NO OF PCS ON SKETCH	MATERIAL ABBRV. DESG.	DIMENSIONS	LENGTH FEET	LENGTH INCH	FINISH AND TRIM DESC.	TRIM INCH	SHIPPING OR ASSEMBLING MARK	SHIPPING SPECIFICATIONS OR ASSEMBLING REFERENCE	REMARKS	ORDERED	ITEM	CALCULATED WEIGHT FOR ONE SHIP PIECE
1		1		Bottom Chord					105 L3-L5^R	69 x 63				
2		1		Bottom Chord					105 L3-L5^L	69 x 63				
3														
4	2	Pl	24 5/8		54	5 5/16	F/E B/E		pa		Cov (A441) E	49 3/4 x 24-0	99157	
5	2	Pl	24 1/2		5	8	F/E B/E		pb^E		Cov (A441) E	84 x 24-0	99162	
6	2	Pl	24 5/8		20	9 31/32	B2E		pc		Cov (A441) E	91 31/32 x 24-0 1/4	99163	
7	2	Pl	24 1/2		9	0	B2E		pd^E		Cov (A441) E	84 x 24-0	99162	
8	2	Pl	24 5/8		18	11 25/32	B2E		pf		Cov (A441) E	49 1/4 x 18 21/32	99153	
9	2	Pl	24 1/2		5	6	F/E B/E		pg		Cov (A441) E	84 x 24-0	99162	
10	2	Pl	24 3/8		5	6	F/E B/E		ph		Cov (A441) E	49 3/4 x 24-8 1/4	99013	X
11	4	Pl	32 1/8		5	8	F/E B/E		pk		Web (A441) E	65 5/16 x 24-11 3/4	99169	
12	4	Pl	32 1/4		20	9 31/32	B2E		pm		Web (A441) E	65 5/16 x 24-11 7/8	1056	
13	2	Pl	32 1/8		9	10	B2E		pn^E		Web (A441) E	65 5/16 x 24-9 3/4	99165	
14	4	Pl	32 1/4		18	11 25/32	B2E		pp		Web (A441) E	65 5/16 x 24-11 3/4	1057	
15	4	Pl	32 1/8		5	6	F/E B/E		pt		Web (A441) E	65 5/16 x 24-11 3/4	99167	
16	4	Pl	16 1/2		3	10 5/8			pp104		Gus			
17	2	Pl	22 1/4		3	1 3/4			pw104					
18	2	Pl	35		3	1 3/4			py104					
19	2	L	8 6	7/16	3	1 3/4			ad104^E					
20	2	Flt	7 3/8	1/2	1	9 1/16			da104		F.1			
21	16	L	4	3 1/2 3/8	2	6 3/4			ab104					
22	8	L	4	3 1/2 3/8	1	9			aa			40-0	99101	
23	2	Pl	21 3/4	7/16	2	7 1/2			pv			84 x 24-0	99103	
24	4	Pl	66 3/8	3/8	6	9	FIED		pw		Gus (A440) E	67 3/4 x 27-4 1/2	1039	
25	4	Pl	32 5/8		4	1			py		A440 E	33 1/2 x 16-6 1/2	99101	
26	4	Pl	31	1	4	9			pba		A440 E	32 1/2 x 15-2 3/4	99104	
27	(2)	Pl	24	3/8	4	9			pbb		A441 E	57 1/2 x 17-6 3/4	99103	27
28	2	L	8 6	7/16	3	5 3/4			ac^R			40-0	99104	
29	2	Flt	7 3/8	5/8		7 3/8			da		F.1	84 x 24-0	99102	
30	2	Pl	19 3/8	7/16	2	7 1/2			pbc			84 x 24-0	99100	
31	2	Pl	22 1/2	3/8	3	5 3/4			pbd			84 x 24-0	99101	
32	2	Pl	36 1/4	3/8	3	4 1/2			pbf				99101	
33	8	L	4	3 1/2 3/8	1	7			ad			40-0	99101	
34	2	Flt	3 3/4	5/8		10 1/2			db		F.1	84 x 24-0	99102	
35	2	Pl	32 1/8		9	0	B2E		pbg^E		Web (A441) E	49 1/4 x 23-11 3/4	99168	
36	2	Pl	24 5/8		4	9			pbh		A441 E		99103	
37														
38	8	M	Bulkheads						mhP101		Ref. on P101			
39														
40	16	SB	19										S	
41	8	SB	8^a										S	
42														
43														
44														
45														
46														
47														
48														
49														
50														
51														
52														
53														
54														
55														
56														
57														
58														
59														
60														
61														
62														

BOTTOM CHORDS 105 L3-L5^R

Note: Break in gage

6 of 4 = 2-0

RA

See Det. "B" "R"

See Det. "D" "R"

See Det. "A" "R"

Sec "R" Det. "D"

FIN

Work Line

59-11 3/4

6-1 | 20-0 3/8 | 3-10 | 3-10 | 19-8 3/8 | 6-5

5-7 1/4 | 21-0 3/8 | 3-3 3/4 | 3-4 1/4 | 20-8 3/8 | 5-10 3/4

29-11 7/8

6-1 | 20-0 3/8 | 3-10 | 3-10 | 19-8 3/8 | 6-5

4-3

7 of 4 = 2-4

= 1'-4 1/2

2-0 | 2-0

REAM

NOTE: Break in gage

M.H. 12"x1'-8" (Typ)

pk pm pbd^R pp pt^L

pa pc pbf pv pbg ad pf^R pw pn^R pd pg ph^R

mh P101

2-pk 2-pm 2-pp

pn^R-N.S. pbd^R-F.S.

pb^R

2-pbf 2-ab

One coat of soft type petrolatum base rust-proofing compound containing no solvent on interior of member - No shop paint.

MP 10% Typ

SECT. "G"

SECT. "F"

2-2 in 10 in Gage (-1'-0")

BOTTOM CHORD 204 L5-L7^R

LIFT. WT. 16 TONS

Bend Line Fs.

RA

pba

py

pbb

ha (Developed)

pc

da

pbb

py

pba

pt^R

hf^R Developed

hg^R Developed

15/16 ϕ

15/16 ϕ

2-2 Op Outlets

5-4½ 4-3¾ 3-4¾ 5-5¼

2-2 in to in Guss

1-1

1-11

6-4½ 2-1/3 = 13-3/8

8-5/8

12

$14 \times 2\frac{1}{2} = 2\text{-}7\frac{1}{2}$

$59\text{-}11\frac{3}{4}$

Bend Line Fs. Pls ha & hg^R

3-0

9

12

4-0

6-5

$5\text{-}10\frac{1}{4}$

$7\frac{15}{16}$

2-$7\frac{13}{16}$

RA

E

RA

RA

REAM

90°

pc

da

hf^R

pt^L

ac^L

ac^R

hg^R

hh^R

hb^R

ph^R

2-pbb

2-pba

hb^L

hh^L

ph^L

db

dc

pt^R

pb^R

pa^R

pd^R

pe^R

pf^R

pg^R

ha^R

hc^R

hd^R

he^R

hf^R

hg^R

hh^R

ac^R

ad^R

ae^R

af^R

ag^R

ah^R

ai^R

aj^R

ak^R

al^R

am^R

an^R

ao^R

ap^R

aq^R

ar^R

as^R

at^R

au^R

av^R

aw^R

ax^R

ay^R

az^R

ba^R

bb^R

bc^R

bd^R

be^R

bf^R

bg^R

bh^R

bi^R

bj^R

bk^R

bl^R

bm^R

bn^R

bo^R

bp^R

bq^R

br^R

bs^R

bt^R

bu^R

bv^R

bw^R

bx^R

by^R

bz^R

ca^R

cb^R

cc^R

cd^R

ce^R

cf^R

cg^R

ch^R

ci^R

cj^R

ck^R

cl^R

cm^R

cn^R

co^R

cp^R

cq^R

cr^R

cs^R

ct^R

cu^R

cv^R

cw^R

cx^R

cy^R

cz^R

da^R

db^R

dc^R

dd^R

de^R

df^R

dg^R

dh^R

di^R

dj^R

dk^R

dl^R

dm^R

dn^R

do^R

dp^R

dq^R

dr^R

ds^R

dt^R

du^R

dv^R

dw^R

dx^R

dy^R

dz^R

ea^R

eb^R

ec^R

ed^R

ee^R

ef^R

eg^R

eh^R

ei^R

ej^R

ek^R

el^R

em^R

en^R

eo^R

ep^R

eq^R

er^R

es^R

et^R

eu^R

ev^R

ew^R

ex^R

ey^R

ez^R

fa^R

fb^R

fc^R

fd^R

fe^R

ff^R

fg^R

fh^R

fi^R

fj^R

fk^R

fl^R

fm^R

fn^R

fo^R

fp^R

fq^R

fr^R

fs^R

ft^R

fu^R

fv^R

fw^R

fx^R

fy^R

fz^R

ga^R

gb^R

gc^R

gd^R

ge^R

gf^R

gg^R

gh^R

gi^R

gj^R

gk^R

gl^R

gm^R

gn^R

go^R

gp^R

gq^R

gr^R

gs^R

gt^R

gu^R

gv^R

gw^R

gx^R

gy^R

gz^R

ha^R

hb^R

hc^R

hd^R

he^R

hf^R

hg^R

hh^R

hi^R

hj^R

hk^R

hl^R

hm^R

hn^R

ho^R

hp^R

hq^R

hr^R

hs^R

ht^R

hu^R

hv^R

hw^R

hx^R

hy^R

hz^R

ia^R

ib^R

ic^R

id^R

ie^R

if^R

ig^R

ih^R

ii^R

ij^R

ik^R

il^R

im^R

in^R

io^R

ip^R

iq^R

ir^R

is^R

it^R

iu^R

iv^R

iw^R

ix^R

iy^R

iz^R

ja^R

jb^R

jc^R

jd^R

je^R

jf^R

jg^R

jh^R

ji^R

jj^R

jk^R

jl^R

jm^R

jn^R

jo^R

jp^R

jq^R

jr^R

js^R

jt^R

ju^R

jv^R

jw^R

jx^R

jy^R

jz^R

ka^R

kb^R

kc^R

kd^R

ke^R

kf^R

kg^R

kh^R

ki^R

kj^R

kk^R

kl^R

km^R

kn^R

ko^R

kp^R

kq^R

kr^R

ks^R

kt^R

ku^R

kv^R

kw^R

kx^R

ky^R

kz^R

la^R

lb^R

lc^R

ld^R

le^R

lf^R

lg^R

lh^R

li^R

lj^R

lk^R

ll^R

lm^R

ln^R

lo^R

lp^R

lq^R

lr^R

ls^R

lt^R

lu^R

lv^R

lw^R

lx^R

ly^R

lz^R

ma^R

mb^R

mc^R

md^R

me^R

mf^R

mg^R

mh^R

mi^R

mj^R

mk^R

ml^R

mm^R

mn^R

mo^R

mp^R

mq^R

mr^R

ms^R

mt^R

mu^R

mv^R

mw^R

mx^R

my^R

mz^R

na^R

nb^R

nc^R

nd^R

ne^R

nf^R

ng^R

nh^R

ni^R

nj^R

nk^R

nl^R

nm^R

nn^R

no^R

np^R

nq^R

nr^R

ns^R

nt^R

nu^R

nv^R

nw^R

nx^R

ny^R

nz^R

oa^R

ob^R

oc^R

od^R

oe^R

of^R

og^R

oh^R

oi^R

oj^R

ok^R

ol^R

om^R

on^R

oo^R

op^R

oq^R

or^R

os^R

ot^R

ou^R

ov^R

ow^R

ox^R

oy^R

oz^R

pa^R

pb^R

pc^R

pd^R

pe^R

pf^R

pg^R

ph^R

pi^R

pj^R

pk^R

pl^R

pm^R

pn^R

po^R

pp^R

pq^R

pr^R

ps^R

pt^R

pu^R

pv^R

pw^R

px^R

py^R

pz^R

qa^R

qb^R

qc^R

qd^R

qe^R

qf^R

qg^R

qh^R

qi^R

qj^R

qk^R

ql^R

qm^R

qn^R

qo^R

qp^R

qq^R

qr^R

qs^R

qt^R

qu^R

qv^R

qw^R

qx^R

qy^R

qz^R

ra^R

rb^R

rc^R

rd^R

re^R

rf^R

rg^R

rh^R

ri^R

rj^R

rk^R

rl^R

rm^R

rn^R

ro^R

rp^R

rq^R

rr^R

rs^R

rt^R

ru^R

rv^R

rw^R

rx^R

ry^R

rz^R

sa^R

sb^R

sc^R

sd^R

se^R

sf^R

sg^R

sh^R

si^R

sj^R

sk^R

sl^R

sm^R

sn^R

so^R

sp^R

sq^R

sr^R

ss^R

st^R

su^R

sv^R

sw^R

sx^R

sy^R

sz^R

ta^R

tb^R

tc^R

td^R

te^R

tf^R

tg^R

th^R

ti^R

tj^R

tk^R

tl^R

tm^R

tn^R

to^R

tp^R

tq^R

tr^R

ts^R

tt^R

tu^R

tv^R

tw^R

tx^R

ty^R

tz^R

ua^R

ub^R

uc^R

ud^R

ue^R

uf^R

ug^R

uh^R

ui^R

uj^R

uk^R

ul^R

um^R

un^R

uo^R

up^R

uq^R

ur^R

us^R

ut^R

uu^R

uv^R

uw^R

ux^R

uy^R

uz^R

va^R

vb^R

vc^R

vd^R

ve^R

vf^R

vg^R

vh^R

vi^R

vj^R

vk^R

vl^R

vm^R

vn^R

vo^R

vp^R

vq^R

vr^R

vs^R

vt^R

vu^R

vv^R

vw^R

vx^R

vy^R

vz^R

wa^R

wb^R

wc^R

wd^R

we^R

wf^R

wg^R

wh^R

wi^R

wj^R

wk^R

wl^R

wm^R

wn^R

wo^R

wp^R

wq^R

wr^R

ws^R

wt^R

wu^R

wv^R

ww^R

wx^R

wy^R

wz^R

xa^R

xb^R

xc^R

xd^R

xe^R

xf^R

xg^R

xh^R

xi^R

xj^R

xk^R

xl^R

xm^R

xn^R

xo^R

xp^R

xq^R

xr^R

xs^R

xt^R

xu^R

xv^R

xw^R

xx^R

xy^R

xz^R

ya^R

yb^R

yc^R

yd^R

ye^R

yf^R

yg^R

yh^R

yi^R

yj^R

yk^R

yl^R

ym^R

yn^R

yo^R

yp^R

yq^R

yr^R

ys^R

yt^R

yu^R

yv^R

yw^R

yx^R

yy^R

yz^R

za^R

zb^R

zc^R

zd^R

ze^R

zf^R

zg^R

zh^R

zi^R

zj^R

zk^R

zl^R

zm^R

zn^R

zo^R

zp^R

zq^R

zr^R

zs^R

zt^R

zu^R

zv^R

zw^R

zx^R

zy^R

zz^R

aa^R

$ab

NOTE: Break in gage

SECT. G

SECT. F

One coat of soft type petrolatum base rust-proofing compound containing no solvent on interior of member - No shop paint.

NOTE: Break in gage

BOTTOM CHORD 205 L7-L9R

LIFT WT. 15 TONS

ZENITH, A. & B. SMITH CO., PGH., PA. J-1103-364

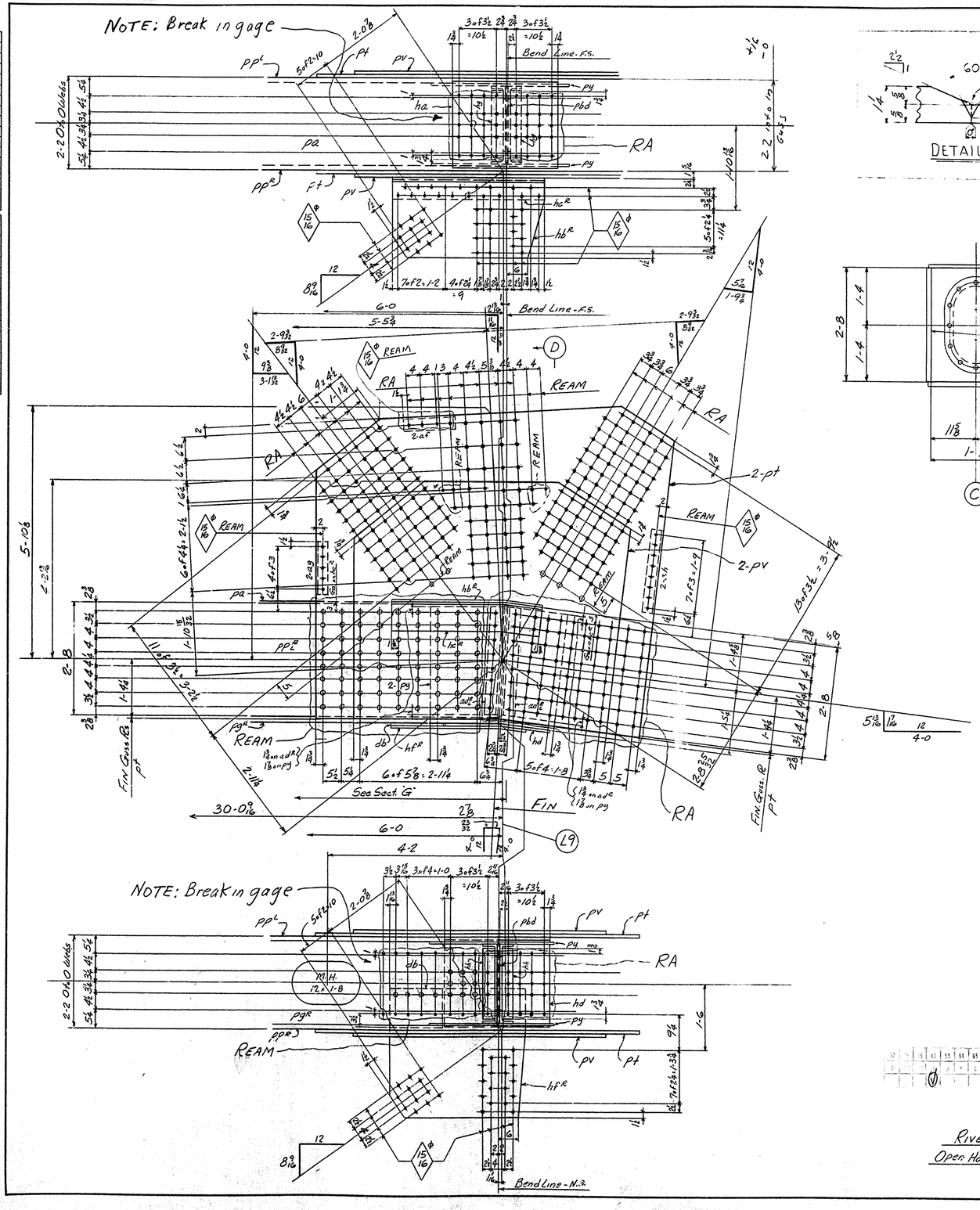

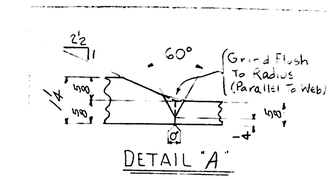

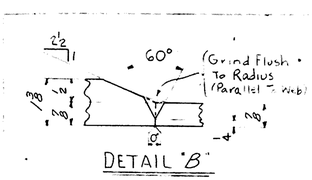

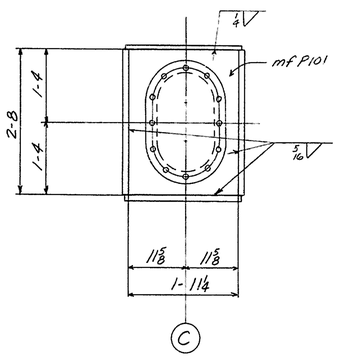

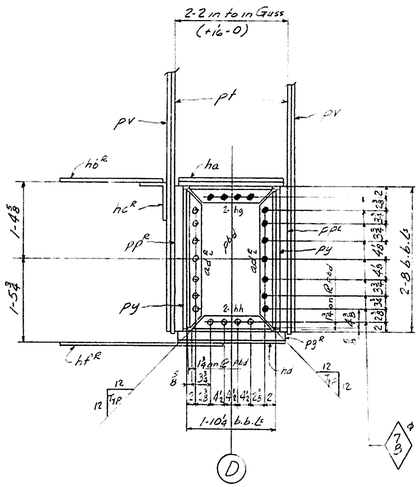

NOTES:

All holes may be punched full size except holes noted "RA" are to be sub-punched or sub-drilled 1/4" and reamed to size while assembled. ~~Holes noted "RP" to be sub-punched or sub-drilled 1/4" and reamed to size thru a metal templet.~~ Holes noted "Ream" are to be sub-punched or sub-drilled 1/4" and reamed. In lieu of sub-punching or sub-drilling and reaming, holes may be drilled full size.

Sheared edges of material noted "E" in the remarks column of the shop bill are to be planed to a depth of 1/4" or be machine flame cut. A440 Steel to be flame cortened.

"R" in the tail of a weld symbol denotes radiograph and "MP" Magnetic Particle Inspection.

All material to be A36 except as noted in Remarks Column of Ship Bill

Rivets ⊕ U.N.
Open Holes ⊕ U.N.

Open Holes are for High Strength Structural Bolts [redacted]
NO PAINT within 5" of Holes for High Strength Structural Bolts

LINE NO.	TOTAL NO. OF PCS. ON ORDER	MATERIAL: NO. OF PCS. ON SKETCH	ABBR. DESC.	DIMENSIONS	LENGTH: FEET	LENGTH: INCH	FINISH AND TRIM: DESC.	FINISH AND TRIM: INCH	SHIPPING OR ASSEMBLING MARK	SHIPPING SPECIFICATIONS OR ASSEMBLING REFERENCE	REMARKS	ORDERED	ITEM	CALCULATED WEIGHT FOR ONE SHIP PIECE
1		1		Bottom Chord					20547-L9R		93½ x 64			
2		1		Bottom Chord					20547-L9L		93½ x 64			
3														
4		2	PL	24 3/8	60	28	FIE		pa		Gr	E 87'-3½ 30'-0	1016	
5		2	PL	24 3/8	4	4½	FIE BIE		pb		Gr	E 84'-7 30'-0	97057	
6		2	PL	24 3/8	19	11 3/16	BIE		pc		Gr	E 120'-9½ 30'-0	97057	
7		2	PL	24 3/8	9	3½	BIE		pd E		Gr	E 84'-7 30'-0	97059	
8		2	PL	24 3/8	20	5 1/16	BIE		pf		Gr	E 120'-9½ 30'-7½	97058	
9		2	PL	24 3/8	5	11	FIE BIE		pg E		Gr	E 84'-7 30'-0	97059	
10		4	PL	32 1 3/8	4	5½	FIE BIE		ph E		Web	E 84'-7 30'-7½	97060	
11		4	PL	32 7/8	19	11½	BIE		pk		Web	E 66'-9½ 30'-7½	9685	
12		2	PL	32 1 3/8	9	3½	BIE		pm E		Web	E 66'-9½ 30'-10½	97061	
13		4	PL	32 7/8	20	5 1/16	BIE		pn		Web	E 66'-9½ 30'-10½	97062	
14		4	PL	32 1 3/8	6	1 5/16	FIE		pp E		Web	E 62'-5½ 30'-10½	97061	
15		2	PL	32 1 3/8	9	3½	BIE		pb f E		Web	E	97061	
16		4	PL	93½ 13/16	8	8 3	FIE		pf		Gusset (A440)	E 74'-5½ 32'-5½	10141	
17		4	PL	70 3/8 ½	6	9			pv		Gusset (A440)	E 71'-3½ 32'-5½	97057	
18		4	PL	17 3/8 ½	3	10 13/16			pw		Gus	E 5'-5½ 30'-0	9109	
19		4	PL	93 3/8 ½	8	2 9/16			py		A440	E 84'-6 40'-0	9705	
20		2	L	8 6 7/16	3	1 3/4			aa E			40'-0	97034	
21		2	PL	22 3/4 ⅜	3	1 3/8			pba			E 84'-6 30'-0	9703	
22		2	Fit	7 3/8 ½	1	7 3/8			da		Fit	E 84'-6 30'-0	9703	
23		2	PL	35½ ⅜	3	1 3/4			pbb			E 84'-6 30'-0	9703	
24		8	L	4 3½ ⅜	1	10			ab			40'-0	9703	
25		8	L	4 3½ ⅜	2	6 3			ab204					
26		2	PL	22 3/4 7/16	2	7½			pbc			E 84'-6 30'-0	9703	
27														
28		2	PL	24½ ½	2	6	Bend		h2		A440	E 84'-6 40'-0	97058	
29		2	PL	22 3/8	3	6½	Bend		hb E			E 84'-6 30'-0	97031	
30		2	L	8 6 7/16	3	6½	Bend		hc E			40'-0	9704	
31		2	PL	24½ ½	2	6	Bend		hd		A440	E 84'-6 30'-0	97058	
32		2	PL	36¼ ⅜	3	1 7/16	Bend		hf E			E 84'-6 30'-0	97031	
33		4	L	4 3½ ⅜	1	9	Bend		h3				97031	
34		4	L	4 3½ ⅜	1	9	Bend		hh			40'-0	97031	
35		8	L	4 3½ ⅜	2	7			ass				97031	
36		2	PL	21½ 7/16	2	7½			pbd			E 84'-7 30'-0	97057	
37		2	Fit	10 3/8 ½	1	3 1/16			db		Fit	E 84'-6 30'-0	97059	
38		4	L	3½ 3½ ⅜	1	3			af				97059	
39		4	L	3½ 3½ ⅜	1	3			ag			40'-0	97059	
40		4	L	3½ 3½ ⅜	2	0			an				97059	
41		4	PL	31 ½	2	4	FIE		dc		Fit	E 84'-6 30'-0	97059	
42														
43		8	M	Bulkheads					mf P101		Def. on Plot			
44														
45														
46		24	SB	⅜ #									5	
47		8	SB	10									5	
48														
49														
50														
51														
52														
53														
54														
55														
56														
57														
58														
59														
60														
61														
62														

Bottom Chords 20547-L7-L9 E

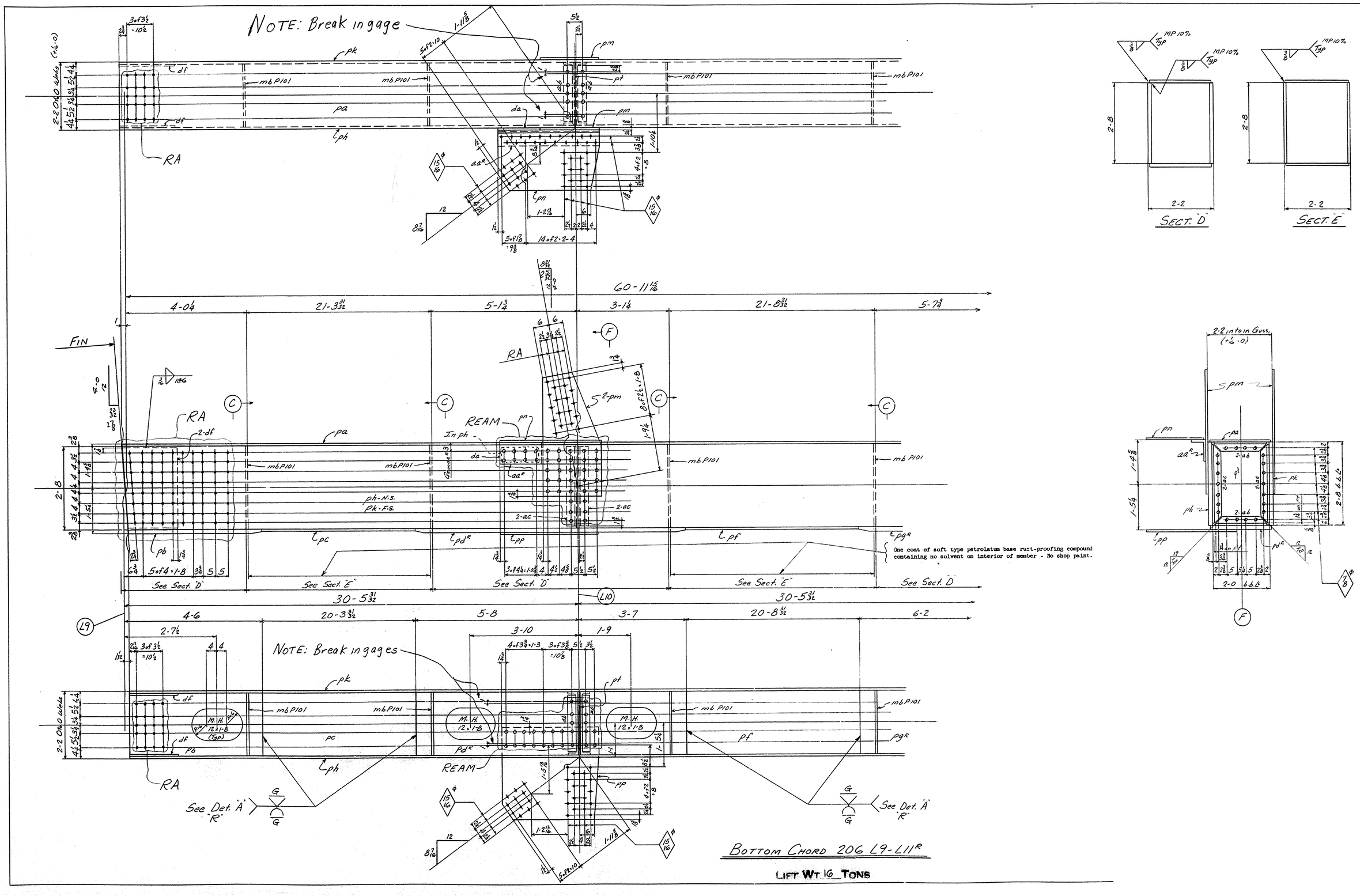

BOTTOM CHORD 206 L9-L11R

LIFT WT. 16 TONS

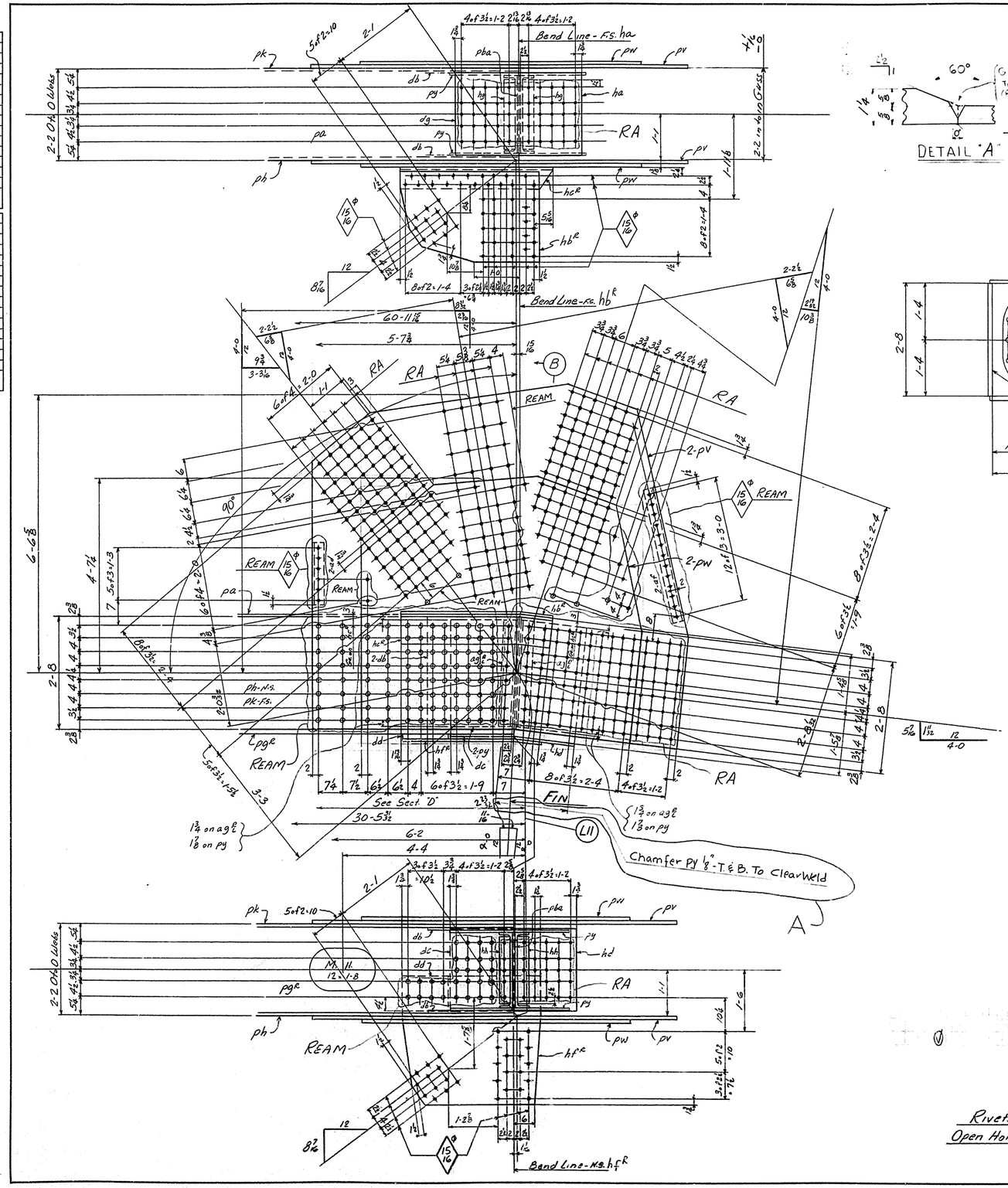

LINE NO.	TOTAL NO. OF PCS. ON SKETCH	MATERIAL: NO. OF PCS. ON ORDER	ABBRV. DESC.	DIMENSIONS	LENGTH: FEET	LENGTH: INCH	FINISH AND TRIM: DESC.	FINISH AND TRIM: INCH	SHIPPING OR ASSEMBLING MARK	SHIPPING SPECIFICATIONS OR ASSEMBLING REFERENCE	REMARKS	ORDERED	ITEM	CALCULATED WEIGHT FOR ONE SHIP PIECE
1		1		Bottom Chord					206L9-L11E	97x66				
2		1		Bottom Chord					206L9-L11C	97x66				
3														
4		2	PL	24½ 5/8	61	1 3/8	FZE		pa		Cov (A441) E	80 5/8 x 61-1 3/4	1083	
5		2	PL	24½ 1/4	4	5 3/16	FZE 5/16		pb		Cov (A441) E	5 3/8 x 5-0	97072	
6		2	PL	24½ 5/8	20	3 3/16	BZE		pc		Cov (A441) E	95 3/4 x 20-0	97079	
7		2	PL	24½ 1/4	9	3	BZE		pd^E		Cov (A441) E	8 3/4 x 9-0	97080	
8		2	PL	24½ 5/8	20	8 3/4	BZE		pf		Cov (A441) E	78 3/4 x 20-0	97082	
9		2	PL	24½ 1/4	6	1/16	FZE 5/16		pg^E		Cov (A441) E	8 3/4 x 6-0	97070	
10		2	PL	32 1	61	1 3/8	FZE		ph		Web (A441) E	65 3/4 x 61-3 1/2	1074	
11		2	PL	32 1	61	1 3/16	FZE		pk		Web (A441) E		1074	
12														
13		4	PL	23 3/8 5/8	3	11 1/4			pm		Cov	8 3/4 x 3-0	97032	
14		2	PL	22 3/8	3	4 3/8			pn			8 3/4 x 3-0	97031	
15		2	PL	34 3/8 3/8	3	2 3/8			pp				97031	
16		2	L	8 6 7/16	3	4 3/8			aa^R			4-0	97004	
17		2	FLT	7 3/8 5/8	1	4½			da		F.I	3 3/4 x 3-0	97002	
18		8	L	4 3½ 5/8	1	10 3/8			ab			4-0	97001	
19		8	L	4 3½ 5/8	2	6 3/8			ac				97001	
20		2	PL	23½ 7/16	2	7½			pf			8 3/4 x 3-0	97030	
21		4	PL	10 3/8 3/8	9	6 1/4			pv		Cov (A440) E	10 5/8 x 9-6 1/4	10134	
22		4	PL	7/16 ½	7	1 1/16			pw		Cov (A440) E	7 7/8 x 7-7 1/4	97049	
23		4	PL	32 13/16 3/8	3	4 1/16			py		A440 E	6 3/4 x 3-0	97067	
24		4	PL	31 ½	2	3 3/8	FIE		db		F.I	8 3/4 x 2-0	97029	
25		4	L	3½ 3½ 3/8	1	6			ad				97019	
26		4	L	3½ 3½ 3/8	3	3			af			3-0	97019	
27														
28		2	PL	23½ ½	3	1 3/8	Bend		ha		A440 E	8 3/4 x 3-0	97032	
29		2	PL	75½ 3/8	3	4 3/8	Bend		hb^E			8 3/4 x 3-0	97031	
30		2	L	8 6 7/16	3	8 1/16	Bend		hc^E			4-0	97044	
31		2	PL	23½ ½	3	0 3/8	Bend		hd		A441 E	8 3/4 x 4-0	97028	
32		2	PL	35 3/8	3	4 1/4	Bend		hf^E			8 3/4 x 3-0	97035	
33		2	PL	23½ 5/8	1	4 3/8	FIE		dc		F.I	7 3/4 x 3-0	97002	
34		2	PL	10 3/4 1/8	1	2			dd		F.I	8 3/4 x 1-2	97015	
35		8	L	4 3½ 5/8	2	7			ag^E			4-0	97001	
36		4	L	4 3½ 5/8	1	8 1/2	Bend		ng				97001	
37		4	L	4 3½ 5/8	1	8 1/2	Bend		hh				97001	
38		2	PL	21/4 7/16	2	7½			pbe			8 3/4 x 3-0	97032	
39		4	PL	31 3/8	1	9 1/2	FIE		df		F.I	5 3/4 x 3-0	97031	
40		2	PL	23½ 4	1	6 1/16	FIE		dg		F.I	3 3/4 x 3-0	97044	
41														
42		8	M	Butcher d's					mb P101		Det on P101		X	
43														
44		24	SB	7/8 #									5	
45		8	SB	1 #									5	
46														
47														
48														
49														
50														
51														
52														
53														
54														
55														
56														
57														
58														
59														
60														
61														
62														

BOTTOM CHORDS 206 L9-L11E

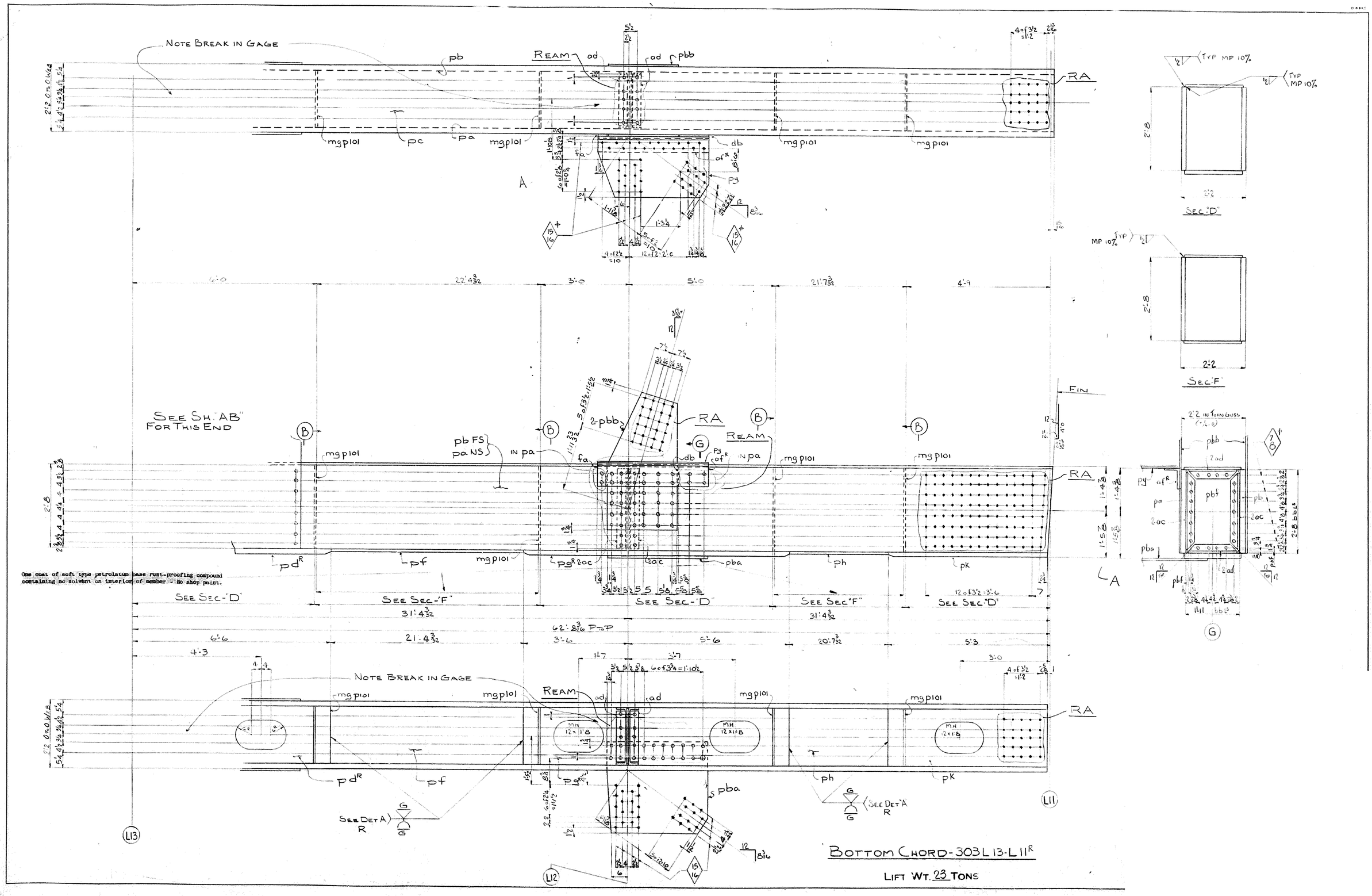

NOTE BREAK IN GAGE
REAM
RA
SEE SH. "AB" FOR THIS END
SEE SEC-"D"
SEE SEC-"F"
SEE DET A R
FIN
One coat of soft type petrolatum base rust-proofing compound containing no solvent on interior of member - No shop paint.
BOTTOM CHORD-303L13-L11R
LIFT WT. 23 TONS

KENITH A. & B. SMITH CO., PGH., PA. J-1183-864

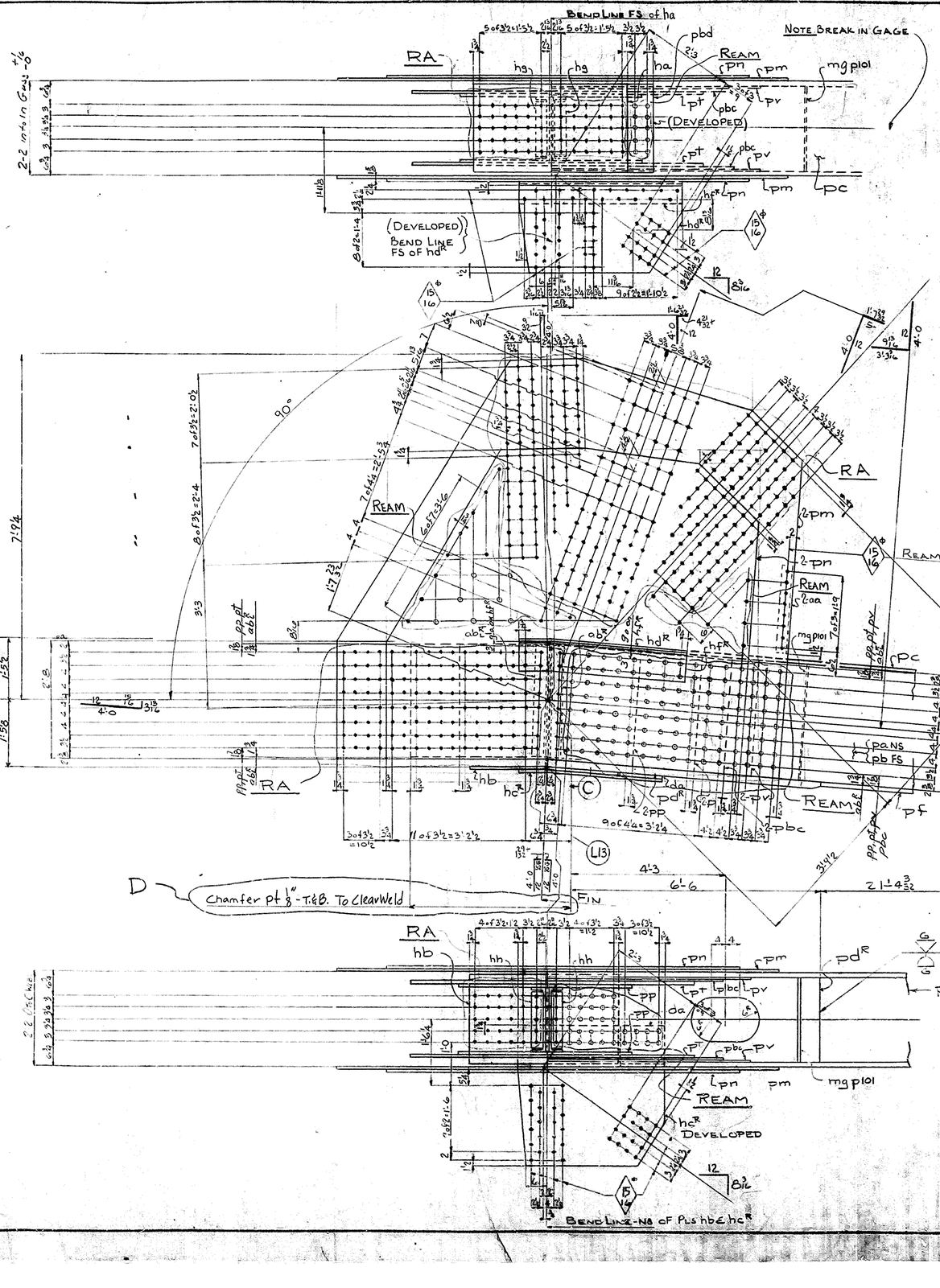

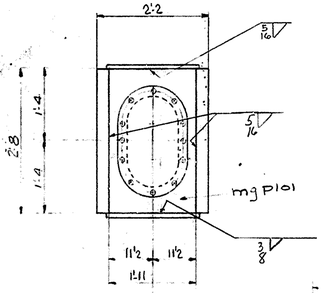

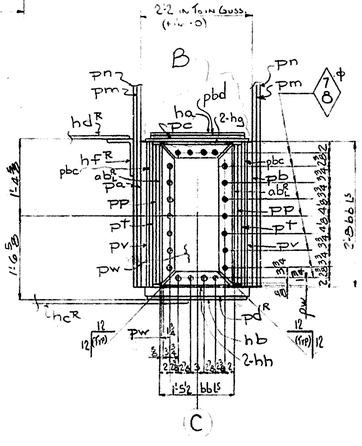

All holes may be punched full size except holes noted "RA" are to be sub-punched or sub-drilled 1/4" and reamed to size while assembled.

Holes noted "Ream" are to be sub-punched or sub-drilled 1/4" and reamed. In lieu of sub-punching or sub-drilling and reaming, holes may be drilled full size.

Sheared edges of material noted "R" in the remarks column of the shop bill are to be planed to a depth of 1/4" or by machine flame cut. A440 STEEL TO BE FLAME SOFTENED

"F" in the tail of a weld symbol indicates radiographic and "MP" Magnetic Particle Inspection.

HOLES 1 1/16 UN
RIVETS 1 UN

ALL MATERIAL A36 STEEL EXCEPT AS NOTED IN SHOP BILL

Open Holes are for High Strength Structural Bolts [illegible] NO PAINT within 5" of Holes for High Strength Structural Bolts

L. I. A. E. NO.	TYPICAL NO. OF PCS. ON PCT. OR MEMBER	MATERIAL: NO. OF PCS. OR LENGTH	MATERIAL: ASSEMBLY MARKS	MATERIAL: NUMBER LOADS	MATERIAL: LENGTH: FEET	MATERIAL: LENGTH: INCHES	FIELD AND SHOP RIVETS: DESIG.	FIELD AND SHOP RIVETS: DIAM	SHIPPING OR ASSEMBLING MARK	SHIPPING SPECIFICATIONS OR ASSEMBLING REFERENCE	REMARKS	ORDERED		CALCULATED WEIGHT FOR ONE PIECE
													ITEM	
1														
2	1			BOTTOM CHORD					303L13 L11		115"x68'			
3	1			BOTTOM CHORD					303L13 L11		115"x 68'			
4	2	PL	32	1 1/2		62	9 1/16	FRE	pa		A441 W&B E	33 3/4 x 62-11/16	99104	
5	2	PL	32	1 1/2		62	9 1/16	FRE	pb		A441 W&B E		99104	
6	2	PL	23 1/2	7/8		62	9/16	F2E	pc		A441 Cov E	23 3/4 x 62-11/16	99109	
7	2	PL	23 1/2	1 1/8		6	5 3/16	B1E F1E	pd R		A441 Cov E	43 3/4 x 22-5 1/4	99116	
8	2	PL	23 1/2	7/8		21	4 3/16	B2E	pf		A441 Cov E	93 3/4 x 22-5 1/4	99104	
9	2	PL	23 1/2	1 1/8		9	0	B1E	pa R		A441 Cov E	43 3/4 x 36-11 3/16	99116	
10	2	PL	23 1/2	7/8		20	7 3/16	B1E	ph		A441 Cov E	43 3/4 x 22-5 1/4	99104	
11	2	PL	23 1/2	1 1/8		5	2 1/16	B1E F1E	pk		A441 Cov E	43 3/4 x 36-11 3/16	99116	
12	4	PL	11 3/4	7/8		11	1 1/2		pm		A440 E	11 3/4 x 22-5 1/4	10311	
13	4	PL	8 3/4	3/4		8	10 1/2		pn		A440 E	8 1/4 x 7 3/4 x 32-10	10413	
14	4	L	3 1/2	3 1/2	3/8	2	0		aa			30-0	99108	
15	2	PL	21 1/2	3/4		3	8 5/8	BEND	ha		A440 E	84 x 30-0	99108	
16	2	PL	21 1/2	3/4		3	7 7/8	BEND	hb		A440 E		99108	
17	4	PL	32	3/4		4	4 3/4		pp		A440 E	84 x 30-0	99118	
18	4	PL	32 1/2	3/4		6	11 3/8		pt		A440 E	34 5/8 x 28-5 1/4	99105	
19	4	PL	31	3/4		5	0 1/4	F1E	pv	A	A440 E	72 3/4 x 36-4 1/4	99106	
20	2	PL	38 1/2	3/8		3	8 5/8	BEND	he R			84 x 30-0	99031	
21	2	PL	9 1/4	3/4		1	2		da			84 x 30-0	99041	
22	2	PL	25 1/4	3/8		4	0 1/8	BEND	hd R			84 x 30-0	99031	
23	2	L	8	6	7/16	4	0 1/8	BEND	hf R			40-0	99104	
24	8	L	4	3 1/2	3/8	2	6 15/16		ab R			40-0	99001	
25	2	PL	17	7/16		2	7 1/2		pw			84 x 30-0	99037	
26	4	L	4	3 1/2	3/8	1	4 1/4	BEND	hg				99001	
27	4	L	4	3 1/2	3/8	1	4 1/4	BEND	hh			40-0	99001	
28	4	PL	31	1/2		4	3 1/2		pbc			84 x 30-0	99029	
29	8	L	4	3 1/2	3/8	1	9 3/4		ad			40-0	99001	
30	2	L	8	6	7/16	3	6 3/8		af L R			40-0	99104	
31	2	PL	22	3/8		3	6 3/8		py			84 x 30-0	99031	
32	2	PL	35	3/8		3	2 1/8		pba				99031	
33	4	PL	27 3/8	5/8		9	3 4		pbb			84 x 30-0	99040	
34	2	FLT	3 1/2	5/8			7 3/8		fa			72 x 30-0	99040	
35	2	PL	7/8	5/8		11			db				99040	
36	8		BULKHEADS						my pl01		DETON PL01		X	
37														
38														
39	2	PL	21 1/2	5/8		2	5 1/16		pbd		fill	84 x 30-0	4 99040	
40	2	PL	22 1/2	7/16		2	7 1/2		pbf		4:1	84 x 30-0	99030	
41	8	L	4	3 1/2	3/8	2	7 1/2		ac			40-0	99001	
42	16	SB	7/8										S	
43	16	SB	1										S	
44														
45														
46														
47														
48														
49														
50														
51														
52														
53														
54														
55														
56														
57														
58														
59														
60														
61														
62														

BOTTOM CHORD 303L13-L11 R

ZENITH, A. & B. SMITH CO., PGH., PA. J-1103-564

D-61XC

The coat of soft type petrolatum base rust-proofing compound containing no solvent on interior of member - No shop paint.

Vertical

2"ϕ Drain Hole

RA to 1⅛ϕ for 1⅛ϕ H.S. Bolts
4-1⅛ϕ U.S. Bolts x 3¼ Lg.

Rivets

Holes & Chord

Note: Break in gage

Base Line

Bend Line Fs. to Fs. (sym. abt. bend l. e.)

Holes ⌀ 1/16 U.N.

Rivets ⌀ 1 U.N.

All material A36 Steel unless noted in shop bill.

All holes may be punched full size except holes noted "RA" are to be sub-punched or sub-drilled 1/4" and reamed to size while assembled. ~~Holes noted "Ream" are to be sub-punched or sub-drilled 1/4" and reamed to size thru a metal template.~~ Holes noted "Ream" are to be sub-punched or sub-drilled 1/4" and reamed. In lieu of sub-punching or sub-drilling and reaming, holes may be drilled full size.

Sheared edges of material noted "E" in the remarks column of the shop bill are to be planed to a depth of 1/4" or be machine flame cut. A440 Steel to be flame cut ~~ened~~

"R" in the tail of a weld symbol denotes radiograph and "MP" Magnetic Particle Inspection.

Open Holes are for High Strength Structural Bolts ~~and Rivets~~. NO PAINT within 5" of Holes for High Strength Structural Bolts

X-Ray ☒ Magnetic

LINE NO.	TOTAL NO. OF PCS. ON ORDER	MATERIAL: NO. OF PCS. ON SKETCH	ABBRV. DESC.	DIMENSIONS	LENGTH: FEET	LENGTH: INCH	FINISH AND TRIM: DESC.	FINISH AND TRIM: INCH	SHIPPING OR ASSEMBLING MARK	SHIPPING SPECIFICATIONS OR ASSEMBLING REFERENCE	REMARKS	ORDERED: LENGTH	ORDERED: ITEM	CALCULATED WEIGHT FOR ONE SHIP PIECE
1		1		BOTTOM CHORD					BOTTOM CHORD 304 L13-L14 R					
2		1		BOTTOM CHORD					BOTTOM CHORD 304 L13-L14 L		BEFORE REAMING			
3		1		BOTTOM CHORD					BOTTOM CHORD 304 L31-L32 R					
4		1		BOTTOM CHORD					BOTTOM CHORD 304 L31-L32 L		BEFORE REAMING			
5	8	PL	32	2¾	32	9⅜	FIE		pa	A441 E				
6	4	PL	21½	1½	31	8 15/16	FIE		pb	A441 E				
7	4	PL	21½	1⅛	8	2	FIE		pc	A441 E				
8	4	PL	21½	1½	22	5 31/32			pd	A441 E				
9	8	PL	110½	⅜	13	1	FIED		pf	A440 E				
10	8	PL	90½	⅜	10	4	FIED		pg	A440 E				
11	8	PL	32	⅜	2	4			ph	E				
12	8	PL	32	¾	2	11¼			pk	A440 E				
13	8	PL	44	⅜	4	34	FIE		pm	A440 E				
14	8	PL	44	2¾	1	5⅜	FIE		pn	A440 E				
15	8	PL	27½	⅜	3	9 15/16			pp					
16	8	PL	28	⅜	2	8 13/16			pt					
17	8	L	8	6	7/16	3	3/8		aat					
18	8	L	8	6	7/16	2	2 9/16		abt					
19	4	PL	21½	⅛	3	5½	Bev'd		ha	A440 E				
20	8	PL	11⅜	⅝	6	0½			pw	A441 E				
21	8	PL	18¾	¾	2	10⅝	FIE		py					
22	16	L	6	4	½	2	11 15/16	FIED	ac					
23	8	M	BULKHEADS						mnP101		DET. ON SHT P101			
24	16	L	5	3½	½	4	0½		ad					
25	16	L	8	6	⅞	3	1⅜		af					
26	8	FL	32	⅜		2	0½		pba	E				
27	8	PL	32	⅜		2	4¼		pbb	A440 E				
28	1	M	TOP SHOE						mfP101	For L13-L14 R	Det on SHT P101	Cont. KO459		
29	1	M	TOP SHOE						mgP101	For L13-L14 L	Det on SHT P101	Cont. KO459		
30	1	M	TOP SHOE						mhP101	For L31-L32 R	Det on SHT P101	Cont. KO459		
31	1	M	TOP SHOE						mkP101	For L31-L32 L	Det on SHT P101	Cont. KO459		
32	16	L	6	4	½	2	11 15/16	FIE	adt			40-0	4 PCS.	
33	32	HSB	1½	RD		7 7					Det on SHT P102			
34														
35	72	SB	1⅛										5	
36	16	SB	⅞										5	
37														
38														
39														
40														
41														
42														
43														
44														
45														
46														
47														
48														
49														
50														
51														

DIV	MARK	
7 3		
	1	BOTTOM CHORD 304 L13-L14 R
	1	BOTTOM CHORD 304 L13-L14 L
	1	BOTTOM CHORD 304 L31-L32 R
	1	BOTTOM CHORD 304 L31-L32 L

BOTTOM CHORD 304 L13 L14 L
304 L31 L32 R L

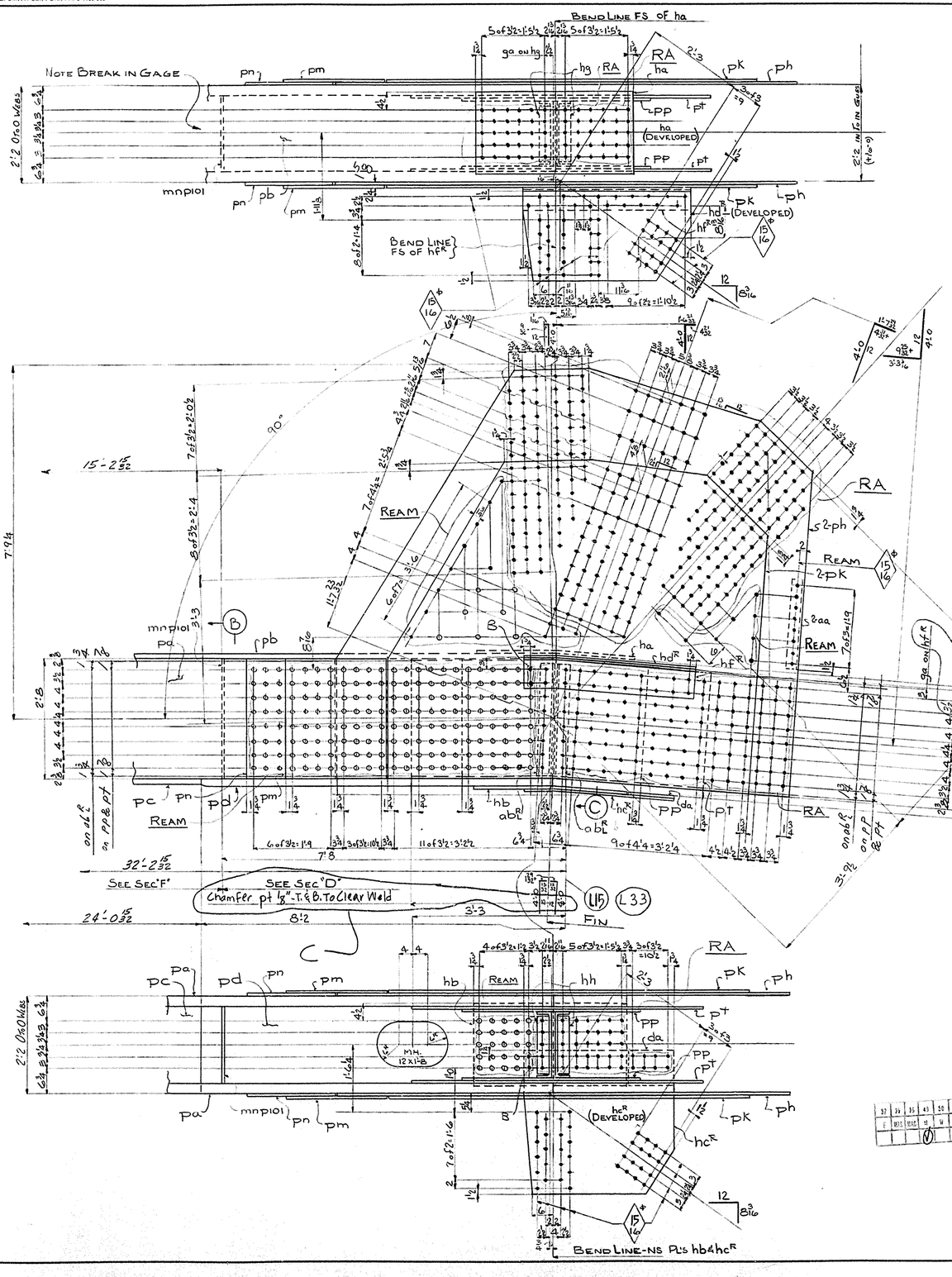

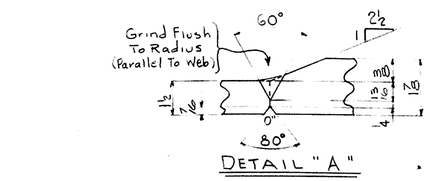

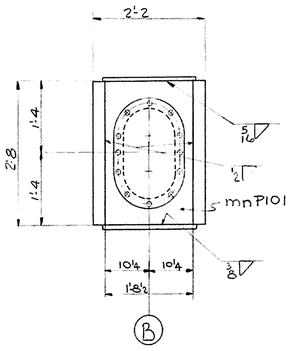

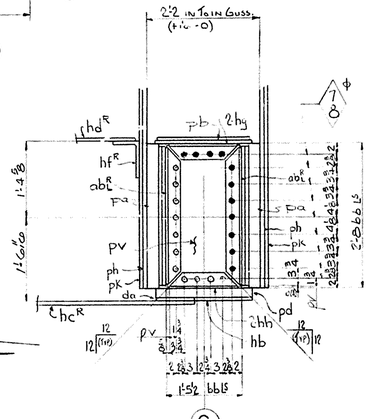

LINE NO.	TOTAL NO. OF PCS. ON ORDER	MATERIAL: NO. OF PCS. ON SKETCH	ABBR. DESC.	DIMENSIONS	LENGTH: FEET	LENGTH: INCH	FINISH AND TRIM: DESC.	FINISH AND TRIM: INCH	SHIPPING OR ASSEMBLING MARK	SHIPPING SPECIFICATIONS OR ASSEMBLING REFERENCE	REMARKS	ORDERED: ITEM	CALCULATED WEIGHT FOR ONE SHIP PIECE
1	1			BOTTOM CHORD					403L14L15R		115'x59'		
2	1			BOTTOM CHORD					403L14L15L		115'x39'		
3	1			BOTTOM CHORD					403L32L33R		115'x39'		
4	1			BOTTOM CHORD					403L32L33L		115'x39'		
5	4	PL	21/2 1 1/2		31	9 5/16	FGE		pb		A441 Cov E	39'4 3/4" 3-1/8"x2"	99230
6	4	PL	21/2 1 1/2		22	6	FIE BIE		pc		A441 Cov E	57'4 1/4" 3-2"x2"	99202
7	4	PL	21/2 1 7/8		8	1 3/8	FIE BIE		pd		A441 Cov E	57'5 3/4" 3-2"x2"	99205
8	8	PL	32 2 3/4		32	9 7/16	FGE		pa		A441 W&D E	57'7 3/4" 4-3"x11"	99204 3286
9	8	PL	32 3/4		2	11 4			pe		A440 L	57'9 3/4" 4-3"x2"	99199
10	8	PL	11 4 3/4	7/8	11	1 1/2			ph		A440 E	57'10 1/4" 4-3"x2"	99235
11	8	PL	8 1/2 3/4		8	10 1/2			pk		A440 E	57'10 3/4" 4-3"x2"	99207
12	8	PL	32 5/8		2	4 4			pm		A440 E	57'8 3/4" 4-3"x2"	99231
13	8	PL	32 7/8		2	10 1/2			pn		E	57'6 3/4" 4-3"x2"	99233
14	8	L	3 1/2	3 1/2 3/8	2	0			aa			41'-0	99197
15	4	PL	21/2 1 7/8		3	8 5/8	BEND		ha		A440 E	57'7 3/4" 3-2"x2"	99229
16	4	PL	21/2 1 9/16		3	7 3/8	BEND		hb		A440 E	57'7 3/4" 3-2"x2"	99229
17	8	PL	32 3/4		4	4 3/4			pp		A440 E	57'9 3/4" 4-3"x2"	99240
18	8	PL	32 1/2 3/4		4	11 3/4			pt		A440 E	57'9 3/4" 4-3"x2"	99241
19	4	PL	38 3/4 5/8		3	88	BEND		hcR			57'-0	99166
20	4	PL	9 3/4 1 3/16		1	2			da				5
21	4	PL	29 3/4 3/8		4	08	BEND		haR			57'-0	11/16
22	4	L	8 6 7/16		4	08	BEND		hfR			40'-0	99115
23	12	L	4 3 1/2 3/8		2	6 9/16			abR			40'-0	99119
24	4	PL	17 7/16		2	7 1/2			pv			57'-0	99238
25	8	L	4 3 1/2 3/8		1	4 4	BEND		hy			41'-0	99119
26	8	L	4 3 1/2 3/8		1	4 4	BEND		hh				99119
27	8	PL	32 7/8		2	4			pf		FIE E	57'-0	99235
28	8		BULKHEADS						mnP101		PER GP101		X
29													
30													
31													
32	40	SB	1										5
33	24	SB	7 8										5
34													
35													
36													
37													
38													
39													
40													
41													
42													
43													
44													
45													
46													
47													
48													
49													
50													
51													
52													
53													
54													
55													
56													
57													
58													
59													
60													
61													
62													

All holes may be punched full size except holes noted "RA" are to be sub-punched or sub-drilled 1/4" and reamed to size while assembled. [redacted] Holes noted "Ream" are to be sub-punched or sub-drilled 1/4" and reamed. In lieu of sub-punching or sub-drilling and reaming, holes may be drilled full size.

Sheared edges of material noted "E" in the remarks column of the shop bill are to be planed to a depth of 1/4" or be machine flame cut. A440 STEEL TO BE FLAME SOFTENED

"R" in the tail of a weld symbol denotes radiograph and "MP" Magnetic Particle Inspection.

HOLES 1 1/16 UN

RIVETS 1 UN

ALL MATERIAL IS A36 STEEL EXCEPT AS NOTED IN SHOP BILL

Open Holes are for High Strength Structural Bolts [redacted] NO PAINT within 5" of Holes for High Strength Structural Bolts

BOTTOM CHORD 403L14-L15R

BOTTOM CHORD 403L32-L33L

PAINT: YES UN

SHOP CONTACT SURFACES: NO

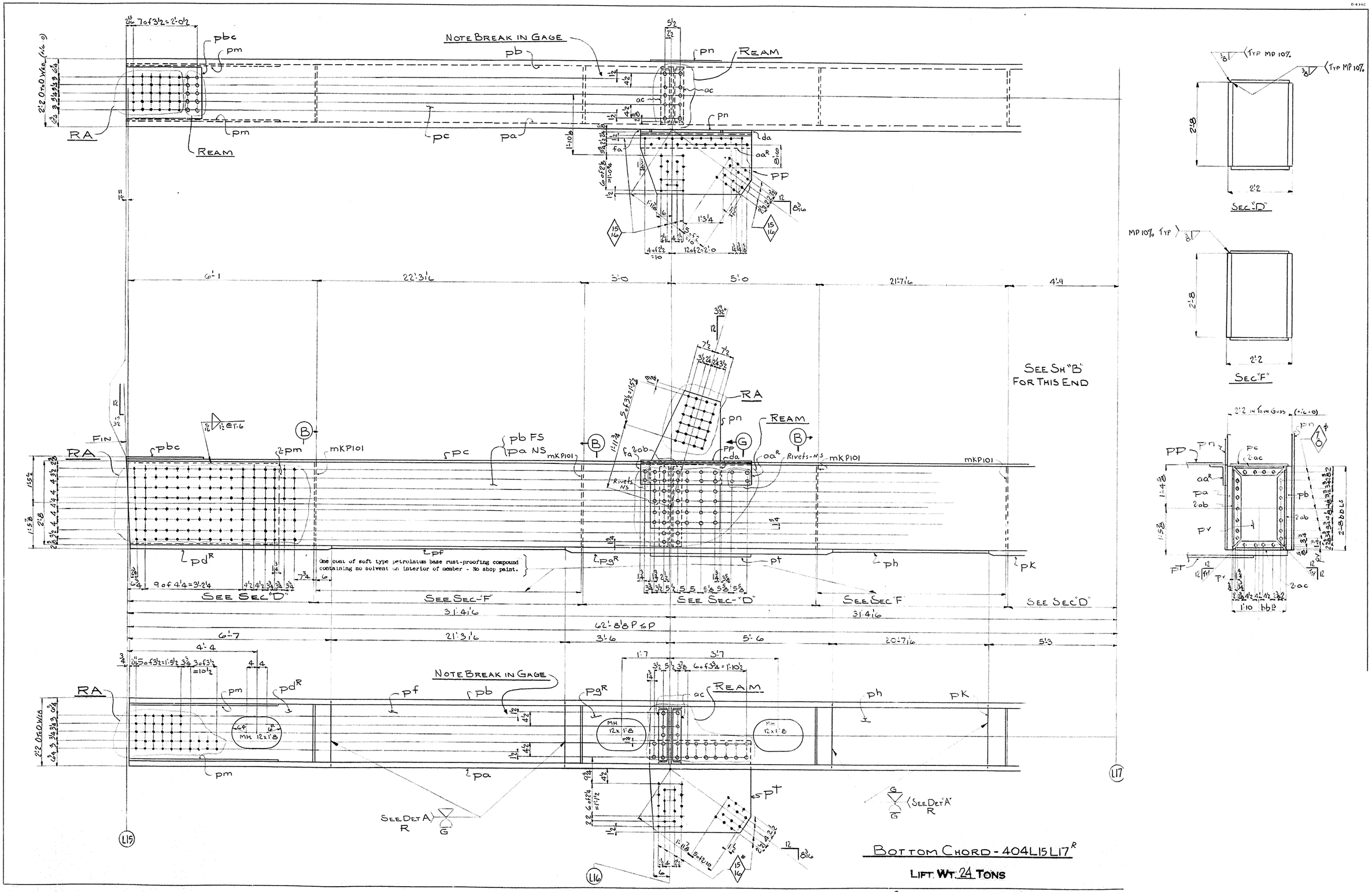

BOTTOM CHORD - 404L15L17R

LIFT WT. 24 TONS

ZENITH, A. & D. SMITH CO., PGH., PA. J-1163-564

B-SIXC

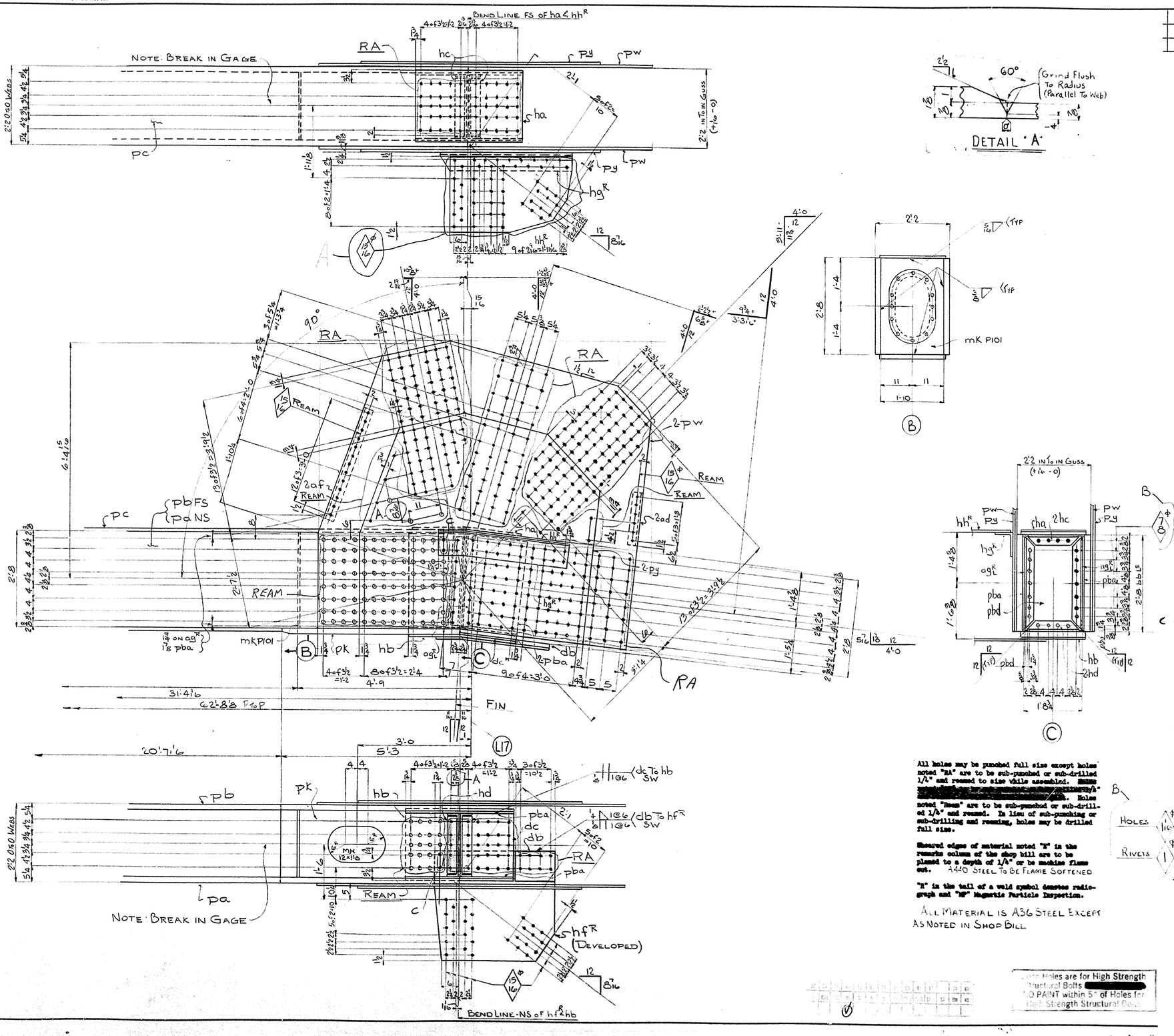

LINE NO.	TOTAL NO. OF PCS. ON ORDER	MATERIAL: NO. OF PCS. ON SKETCH	ABBV. DESC.	DIMENSIONS	LENGTH: FEET	LENGTH: INCH	FINISH AND TRIM: DESC.	FINISH AND TRIM: INCH	SHIPPING OR ASSEMBLING MARK	SHIPPING SPECIFICATIONS OR ASSEMBLING REFERENCE	REMARKS	ORDERED: ITEM	CALCULATED WEIGHT FOR ONE SHIP PIECE
1													
2													
3	1		BOTTOM CHORD						404L15L17	105"x6.8"			
4	1		BOTTOM CHORD						404L15L17				
5	2	PL		32 2	42	9 11/16	F2E		pa		A441 W&D E	1/2"x 2' 62-11 1/4	99254
6	2	PL		32 2	62	9 11/16	F2E		pb		A441 W&D E		99254
7	2	PL		22 1/2 3/8	42	9 1/2	F2E		pc		A441 F&G E	9/16"x 2' 62-11 1/4	4070
8	2	PL		22 1/2 1/8	6	6 5/16	SEE FIE		pd R		A441 F&G	9/32"x 2' 7-5 1/2	99269
9	2	PL		22 1/2 3/8	21	3 1/16	B2E		pf		A441 F&G E	9/32"x 2' 21-5 1/2	99265
10	2	PL		22 1/2 1/8	9	0	B2E		pg R		A441 F&G E	9/16"x 2' 10-5	99267
11	2	PL		22 1/2 3/8	20	7 1/16	B2E		ph		A441 F&G E	9/32"x 2' 20-5 1/2	99269
12	2	PL		22 1/2 1/8	5	2 1/16	B1E F1E		pk		A441 F&G E	9/32"x 2' 14-5	99267
13	4	PL		31 3/4	5	0 5/8	F1E		pm		A440 PLG E	3/8"x 2' 30-0	99246
14	4	PL		27 5/8	4	3 1/4			pn			3/4"x 2' 30-0	99164
15	2	FLT		3 1/2 5/8		7 3/8			fa			7/8"x 10-0	99246
16	2	FLT		7 3/8 5/8		11			da				99246
17	2	L		8 6 7/16	3	6 3/8			aa R			40-0	99125
18	2	PL		22 3/8		3 5/8			pp			3/4"x 30-0	99166
19	2	PL		35 3/8		3 2/8			pt				99166
20	8	L		4 3 1/2 5/8	2	6 3/4			ab			40-0	99119
21	8	L		4 3 1/2 5/8	1	8 3/4			ac				99119
22	2	PL		21 1/2 7/16		2 7/2			pv			3/4"x 30-0	99234
23													
24													
25	4	PL		102 1/8 7/8		9 8 1/2			pw		A440 GUSS E	1 3/8"x 2' 9 3/4"	4038
26	4	PL		76 9/16 1/2		7 11/16			py		A440 GUSS E	1 1/16"x 2' 7-5 1/2	99178
27	4	PL		30 3/8 5/8		3 5/16			pba		A440 SPL E	5/16"x 2' 3-7 1/2	99183
28	2	PL		21 1/2 5/8		2 5/16			pbc		A440 SPL E		99183
29	2	PL		22 1/2 1/2		3 18	BEND		ha		A440 E	3/4" 30-0	99177
30	2	PL		22 1/2 1/2		3 0 3/4	BEND		hb		A440 E	30-0	99177
31	4	L	4	3 1/2 3/8	1	7 1/2	BEND		hc			40-0	99119
32	4	L	4	3 1/2 3/8	1	7 1/2	BEND		hd				99119
33	2	PL		20 1/4 1/16		2 7 1/2			pbd			3/4"x 30-0	99234
34	2	PL		35 1/2 3/8		3 4 1/2	BEND		hf R			5/8"x 30-0	99176
35	2	PL		9 3/4 1/8		1 2			db			5/8"x 2' 30-0	99242
36	2	PL		22 1/2 5/8		1 6 8	F1E		dc			3/4"x 30-0	99164
37	2	L		8 6 7/16	3	11 3/8	BEND		hg R			40-0	99125
38	2	PL		25 1/2 3/8		3 7 1/4	BEND		hh R			3/4"x 30-0	99166
39	4	L		3 1/2 3 1/2 3/8	1	6			ad				99177
40	4	L		3 1/2 3 1/2 3/8	3	3			af			40-0	99119
41													
42	8		BULKHEADS						mK P101		DET. ON SH. P101		X
43													
44													
45	8	L		4 3 1/2 3/8	2	7			ag L			40-0	99119
46													
47	8	SB		7/8									S
48	16	SB		1									S
49													
50													
51													
52													
53													
54													
55													
56													
57													
58													
59													
60													
61													
62													

BOTTOM CHORD 404L15-L17 R L

All holes may be punched full size except holes noted "RA" are to be sub-punched or sub-drilled 1/4" and reamed to size while assembled. [redacted]. Holes noted "Ream" are to be sub-punched or sub-drilled 1/4" and reamed. In lieu of sub-punching or sub-drilling and reaming, holes may be drilled full size.

Sheared edges of material noted "R" in the remarks column of the shop bill are to be planed to a depth of 1/8" or be machine flame cut. A440 STEEL TO BE FLAME SOFTENED

"R" in the tail of a weld symbol denotes radiograph and "M" Magnetic Particle Inspection.

ALL MATERIAL IS A36 STEEL EXCEPT AS NOTED IN SHOP BILL

HOLES ⌀ 13/16 IN

RIVETS ⌀ 1 IN

PAINT: YES UN

*ENDP CONTACT SURFACES: NO

Holes are for High Strength Structural Bolts [redacted] PAINT within 5" of Holes for High Strength Structural Bolts

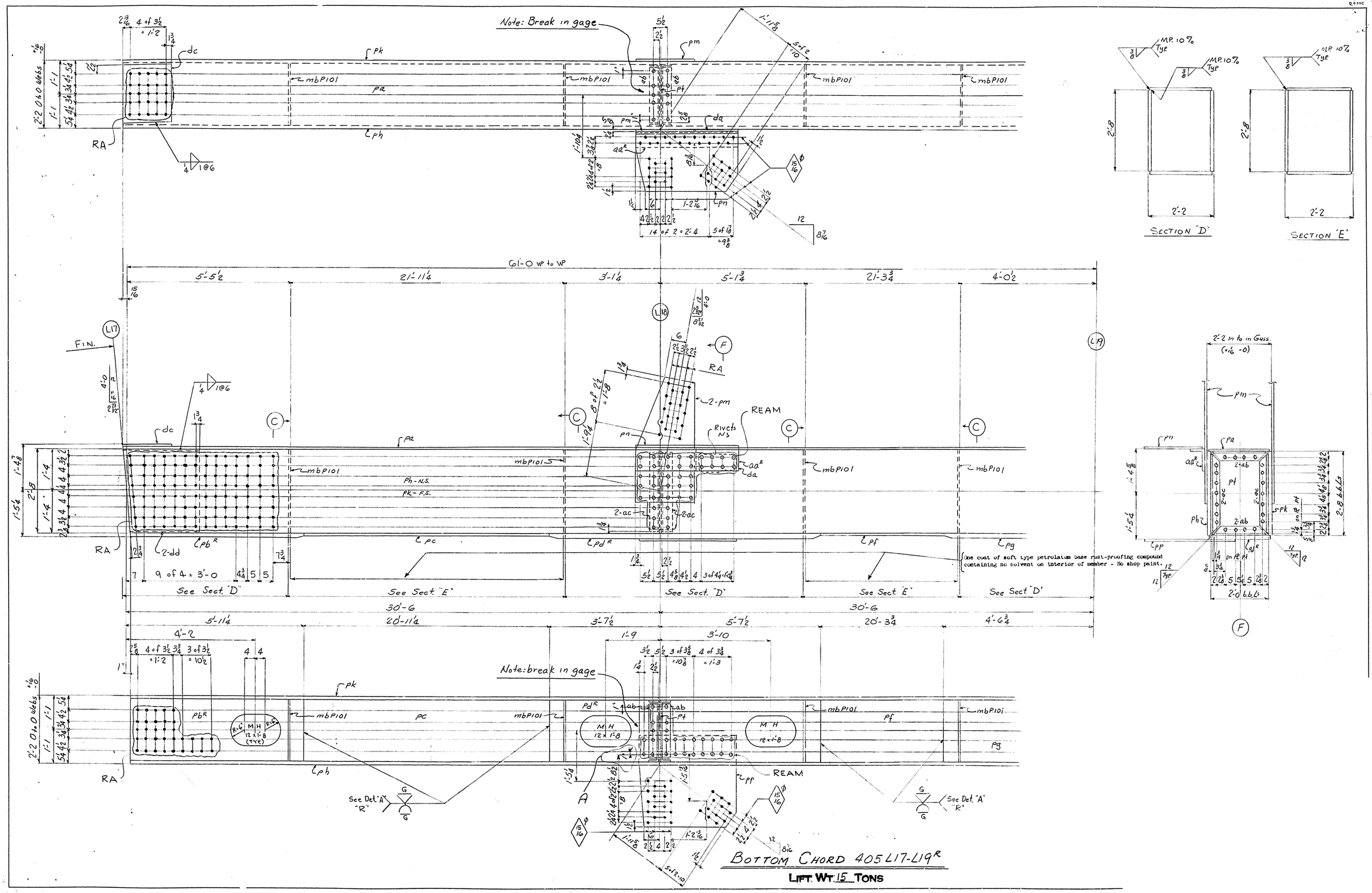

BOTTOM CHORD 405 L17-L19R

LIFT WT. 15 TONS

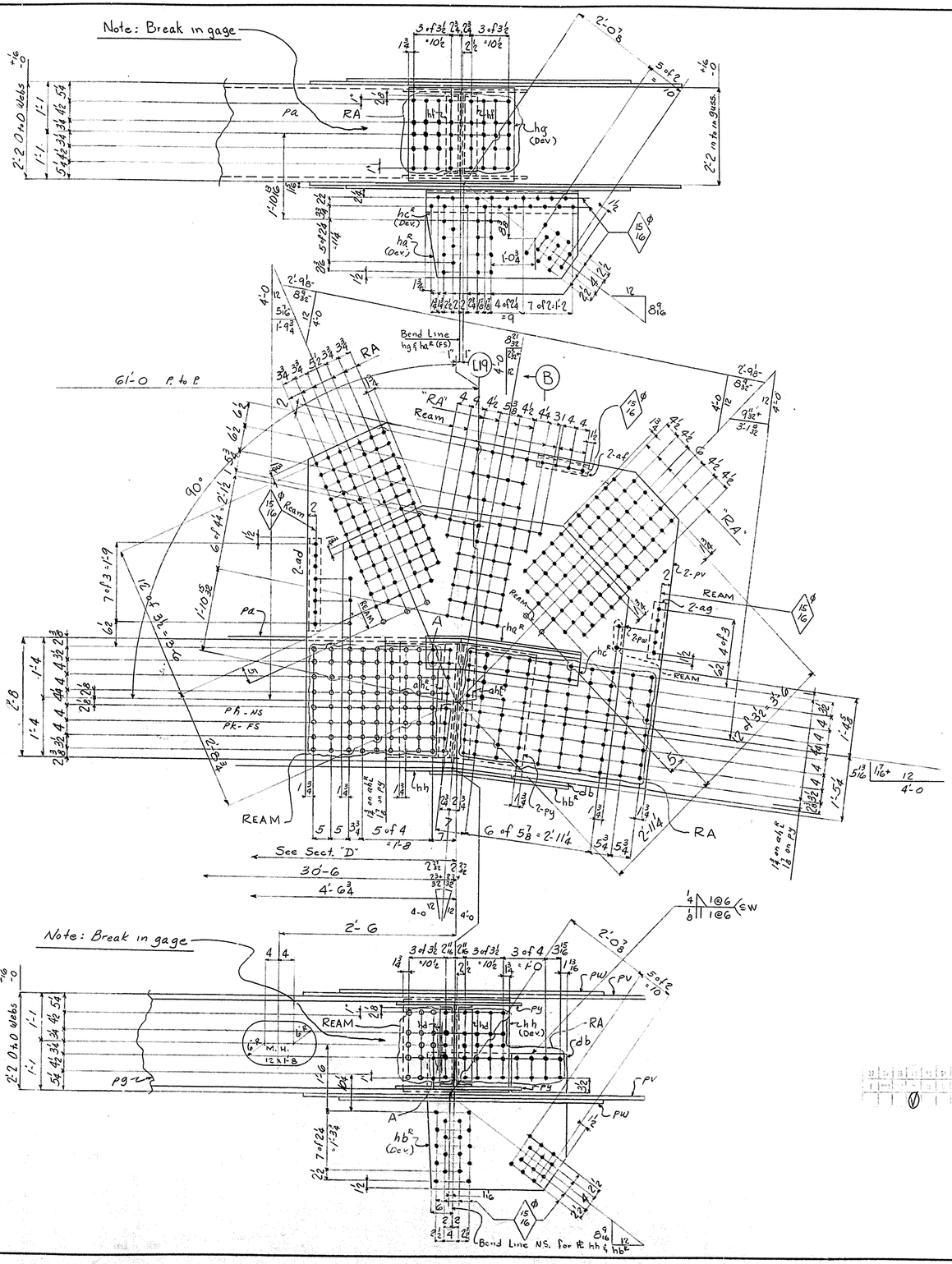

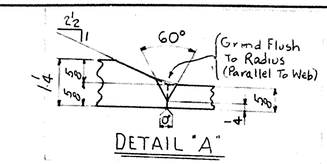

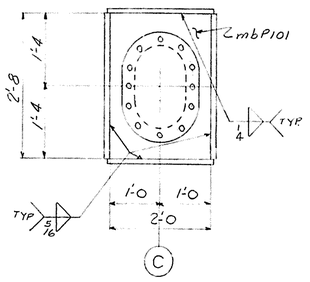

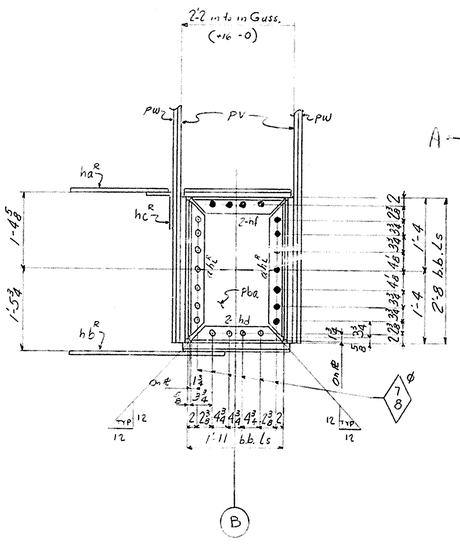

LINE NO.	TOTAL NO. OF PCS. ON ORDER	NO. OF PCS. ON SKETCH	ABBRV. DESC.	MATERIAL DIMENSIONS	LENGTH FEET	LENGTH INCH	FINISH AND TRIM DESC.	FINISH AND TRIM INCH	SHIPPING OR ASSEMBLING MARK	SHIPPING SPECIFICATIONS OR ASSEMBLING REFERENCE	REMARKS	ORDERED	ITEM	CALCULATED WEIGHT FOR ONE SHIP PIECE
1														
2	1			BOTTOM CHORD					405L17L19^R		97x65			
3	1			BOTTOM CHORD					405L17L19^L		97x65			
4														
5	2	PL		24½ x ⅝	61	1⅝	FIE		pa			84x61'-3"	4581	
6	2	PL		24½ x 1/4	5	10⅝	FIE BIE		pb^R		Cov A441 E	84x2'-0	99113	
7	2	PL		24½ x ⅝	20	11¼	BEE		pc		Cov A441 E	97x2'-10	99224	
8	2	PL		24½ x 1/4	9	3	BEE		pd^R		Cov A441 E	84x2'-0	99113	
9	2	PL		24½ x ⅝	20	3¾	BEE		pf		Cov A441 E	97x2'-10	99223	
10	2	PL		24½ x 1/4	4	5⅜	FIE BIE		pg		Cov A441 E	84x2'-0	99113	
11	2	PL		32 x 1	61	1⅛	FEE		ph		W26 A441 E	2'-7½x61'-5"	4585	
12	2	PL		32 x 1	61	1⅛	FEE		pk		W26 A441 E		4585	
13	2	PL		23⅜ x ⅝	3	11¼			pm		Guss	84x3'-0	99114	
14	2	PL		21⅜ x 3/8	3	4⅜			pn			84x3'-0	99110	
15	8	M		Bulkheads					mbP101		See on Sht P101			X
16	2	PL		34⅜ x ⅜	3	2⅜			pp			84x3'-0	99116	
17	2	PL		23½ x 7/16	2	7½			pt			84x3'-0	99134	
18	2	L	5	6 x 7/16	3	4⅜			aa^L			40'-0	99135	
19	8	L	4	3½ x ⅜	1	10½			ab			40'-0	99117	
20	8	L	4	3½ x ⅜	2	6¾			ac				99119	
21	2	FLT		7⅜ x ⅝	1	4½			da		F.I	45x10'-0	99146	
22	4	PL		97⅛ x 13/16	8	8¼			pv		Guss A220 E	3'-1⅞x35'-1⅞	4581	
23	4	PL		73½ x ½	6	8⅜			pw		Guss A220 E	2'-4½x35'-1⅞	99182	
24	2	PL		22 13/16 x ⅜	3	7	Bend		ha^R			84x	99116	
25	2	PL		36¾ x ⅜	3	2⅞	Bend		hb^R			30-0	99116	
26	2	L	8	6 x 7/16	3	7	Bend		hc^R			40-0	99128	
27	4	L	5½	3½ x ⅜	2	0			ad			40-0	99132	
28	4	L	3½	3½ x ⅝	1	3			af				99132	
29	4	L	3½	3½ x ⅝	1	3			ag				99132	
30	4	L	4	3½ x ⅜	1	4¾	Bend		hd			40-0	99119	
31	4	L	4	3½ x 1/2	1	9⅞	Bend		hf				99119	
32	2	PL		24½ x ½	2	6	Bend		hg		A440 E	84x	99177	
33	2	PL		24½ x ½	2	5⅝	Bend		hh		A440 E	30-0	99177	
34	2	PL		10⅜ x ½	1	3⅜			db		F.I	3½x3'-4	99165	
35	4	PL		32⅛ x ½	3	3½			py		A440 E	3½x3'-0	99177	
36														
37	10	SB		1 ⌀									S	
38	12	SB		⅞ ⌀									S	
39														
40	2	PL		22½ x 1/4	1	6 9/16	FIE		dc		F.I	84x2'-0	99105	
41	4	PL		31 x 1	2	5⅝	FIE		dd		F.I	45x3'-0	99177	
42	8	L	4	3½ x ⅜	2	7			ah^L			40-0	99119	
43	2	PL		22½ x 1/16	2	7½			Pba			84x2'-0	99134	

BOTTOM CHORDS 405L17-L19^L

All material to be A36 Steel unless noted in shop bill

Open Holes are for High Strength Structural Bolts
"O PAINT" Holes for High Strength Bolts

All holes may be punched full size except holes noted "RA" are to be sub-punched or sub-drilled 1/4" and reamed to size while assembled. ~~Holes noted "HH" to be sub-punched or sub-drilled 1/4" and reamed to size thru a metal template.~~ Holes noted "Ream" are to be sub-punched or sub-drilled 1/4" and reamed. In lieu of sub-punching or sub-drilling and reaming, holes may be drilled full size.

Sheared edges of material noted "S" in the remarks column of the shop bill are to be planed to a depth of 1/4" or be machine flame cut. A110 Steel to be flame softened

"R" in the tail of a weld symbol denotes radiograph and "MP" Magnetic Particle Inspection.

Holes 11/16 ⌀ U.N.

Rivets 1 ⌀ U.N.

X-Ray ☑ Magnetic

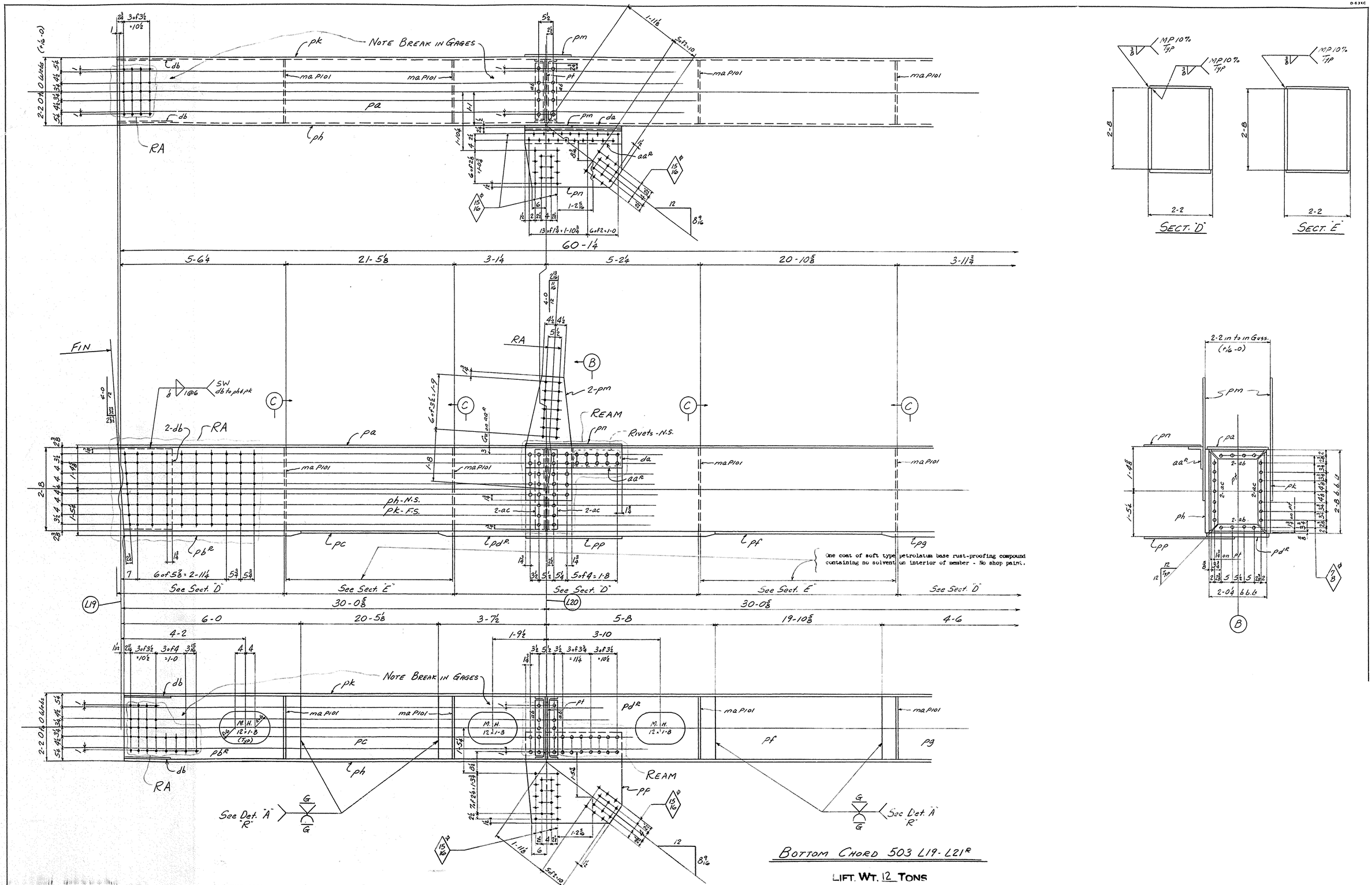

BOTTOM CHORD 503 L19-L21R

LIFT. WT. 12 TONS

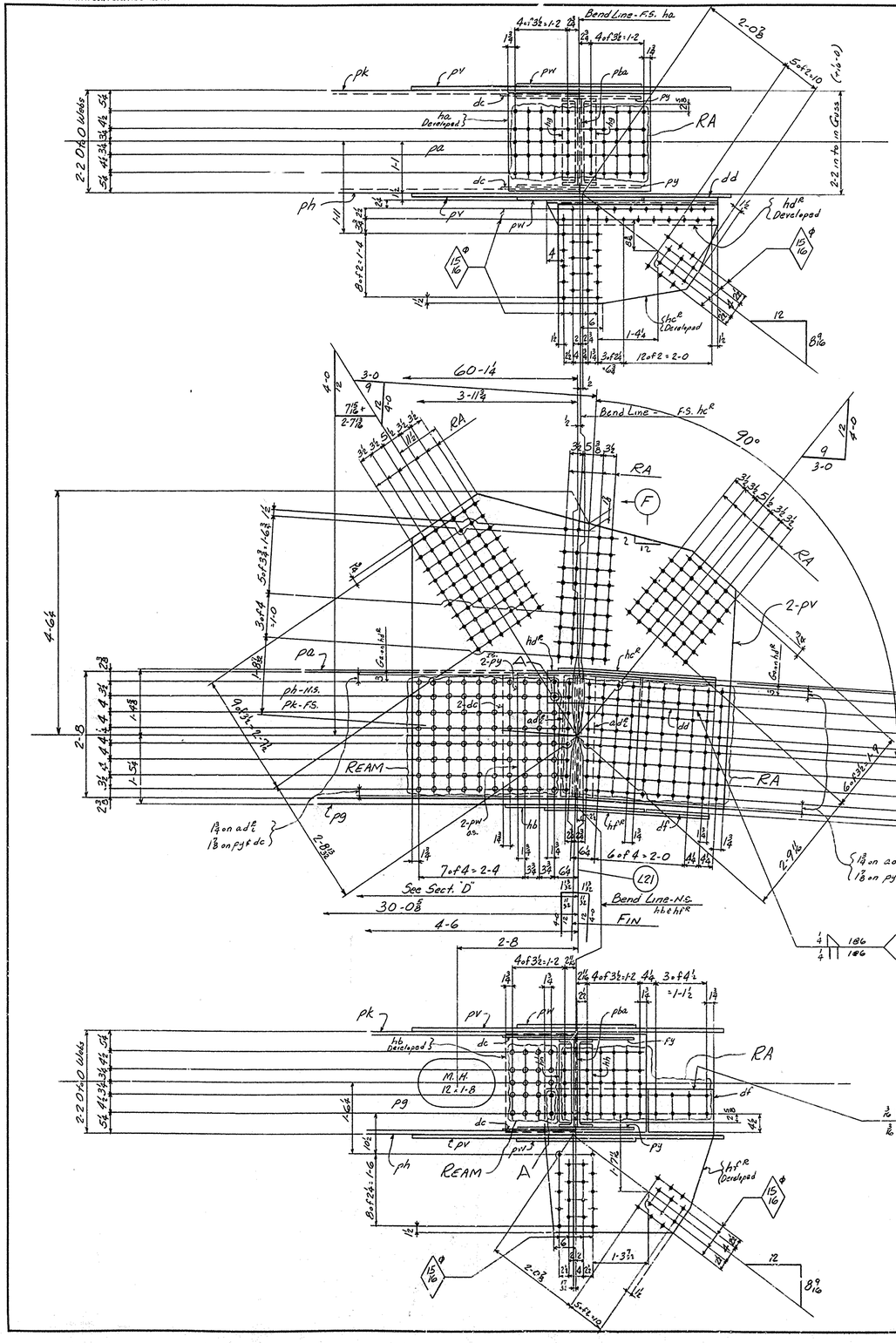

NOTES:

All holes may be punched full size except holes noted "RA" are to be sub-punched or sub-drilled 1/4" and reamed to size while assembled. ~~Holes noted "Sprd" to be sub-punched or sub-drilled 1/4" and reamed to size thru a metal sampler.~~ Holes noted "Ream" are to be sub-punched or sub-drilled 1/4" and reamed. In lieu of sub-punching or sub-drilling and reaming, holes may be drilled full size.

Sheared edges of material noted "E" in the remarks column of the shop bill are to be planed to a depth of 1/4" or be machine flame cut. A440 Steel to be flame softened.

"R" in the tail of a weld symbol denotes radiograph and "MP" Magnetic Particle Inspection.

All material is A36 Steel except as noted in Remarks Column of Shop Bill.

Rivets / Open Holes — 1 — U.N. / 1/16 — U.N.

Open Holes are for High Strength Structural Bolts
~~NO PAINT within 5" of Holes for High Strength Structural Bolts~~

LINE NO.	TOTAL NO. OF PCS. ON ORDER	MATERIAL: NO. OF PCS. ON SKETCH	ABBRV. DESC.	DIMENSIONS	LENGTH: FEET	LENGTH: INCH	FINISH AND TRIM: DESC.	FINISH AND TRIM: INCH	SHIPPING OR ASSEMBLING MARK	SHIPPING SPECIFICATIONS OR ASSEMBLING REFERENCE	REMARKS	ORDERED	ITEM	CALCULATED WEIGHT FOR ONE SHIP PIECE
1		1		Bottom Chord					503L19-L21^R	B1 x 64				
2		1		Bottom Chord					503L19-L21^E	B1 x 64				
3														
4	2	PL	24¾ 5/8		60	2⅜	F2E		pa		Gr E	5/15 x 60-4½	41016	
5	2	PL	24¾ 1/4		5	11/16	F1E B1E		pb^E		Gr E	B4½ x 20-0	99195	
6	2	PL	24¾ 5/8		20	5/16	B2E		pc		Gr E	15/16 x 20-0	99197	
7	2	PL	24¾ 1/4		9	3/32	B2E		pd^E		Gr E	B4½ x 26-0	99193	
8	2	PL	7-7½ 3/8		19	10⅜	B2E		pf		Gr E	5/16 x 20-0	99198	
9	2	PL	24⅜ 1/4		4	5½	F2E B1E		pg		Gr E	B4½ x 20-0	99195	
10	2	PL	32 3/8		60	2⅝	F2E		ph		Web E	6/35½ x 60-4½	41019	
11	2	PL	32 3/8		60	2⅜	F2E		pk		Web E		41017	
12														
13	4	PL	17⅜ 1/2		3	10¾			pm		Gross	B4½ x 30-0	99115	
14	2	L	8 6	7/16	3	1⅜			aa^E			4 x 3-0	99108	
15	2	PL	22¼ 3/8		3	1½			pn			B4½ x 30-0	99116	
16	2	PL	35½ 3/8		3	1⅜			pp				99116	
17	2	FLT	7⅜ 1/2		1	7⅜			da		F1	3½ x 8-0	99119	
18	8	L	4 3½	3/8	1	11			ab				99119	
19	8	L	4 3½	3/8	2	6¾			ac503			4 x 3-0	99117	
20	2	PL	23⅜ 7/16		2	7½			pt			B4½ x 30-0	99204	
21	4	SHT	31 3/8		1	9½	F1E		db		F1	1½ x 8-0	99119	
22	4	PL	79⅜ 3/8		7	2⅝			pv		Gross (A440) E	B3½ x 32-3½	99191	
23	4	PL	32⅛ 5/8		2	8½			pw		A440 E	6/14 x 27-10	99193	
24	4	PL	31⅜ 5/8		2	8½			py		A440 E		99197	
25	4	PL	31 1/2		1	8	F1E		dc		F1	5½ x 30-0	99185	
26														
27	2	PL	24½ 1/2		3	1	Bend		ha		A440 E	5½ x 30-0	99117	
28	2	PL	24½ 1/2		3	0⅝	Bend		hb		A440 E	3½ x 30-0	99117	
29	2	PL	25¼ 3/8		3	6⅜	Bend		hc^E			B4½ x 30-0	99116	
30	2	L	8 6	7/16	3	9¼	Bend		hd^E			4 x 3-0	99108	
31	2	FL	7-3 1-0	5/8	1	17⅞			dd		F1	B4½ x 30-0	99196	
32	2	PL	10⅜ 1/2		1	5½			df		F1	B4½ x 30-0	99165	
33	2	PL	36⅜ 3/8		3	8⅜	Bend		hf^E			5½ x 30-0	99116	
34	4	L	4 3½	3/8	1	8⅜	Bend		ng			40-0	99111	
35	4	L	4 3½	3/8	1	8⅜	Bend		hh				99119	
36	8	L	4 3½	3/8	2	6⅜			ad^E				99113	
37	2	PL	21½ 7/16		2	7½			pba			B4½ x 30-0	99184	
38														
39														
40														
41	8	M	Bulkheads						ma P101		Det. on P101		X	
42														
43														
44	24	SB	19										1.5	
45	8	SB	34										1.5	
46														
47														
48														
49														
50														
51														
52														
53														
54														
55														
56														
57														
58														
59														
60														
61														
62														

Bottom Chords 503 L19-L21^E

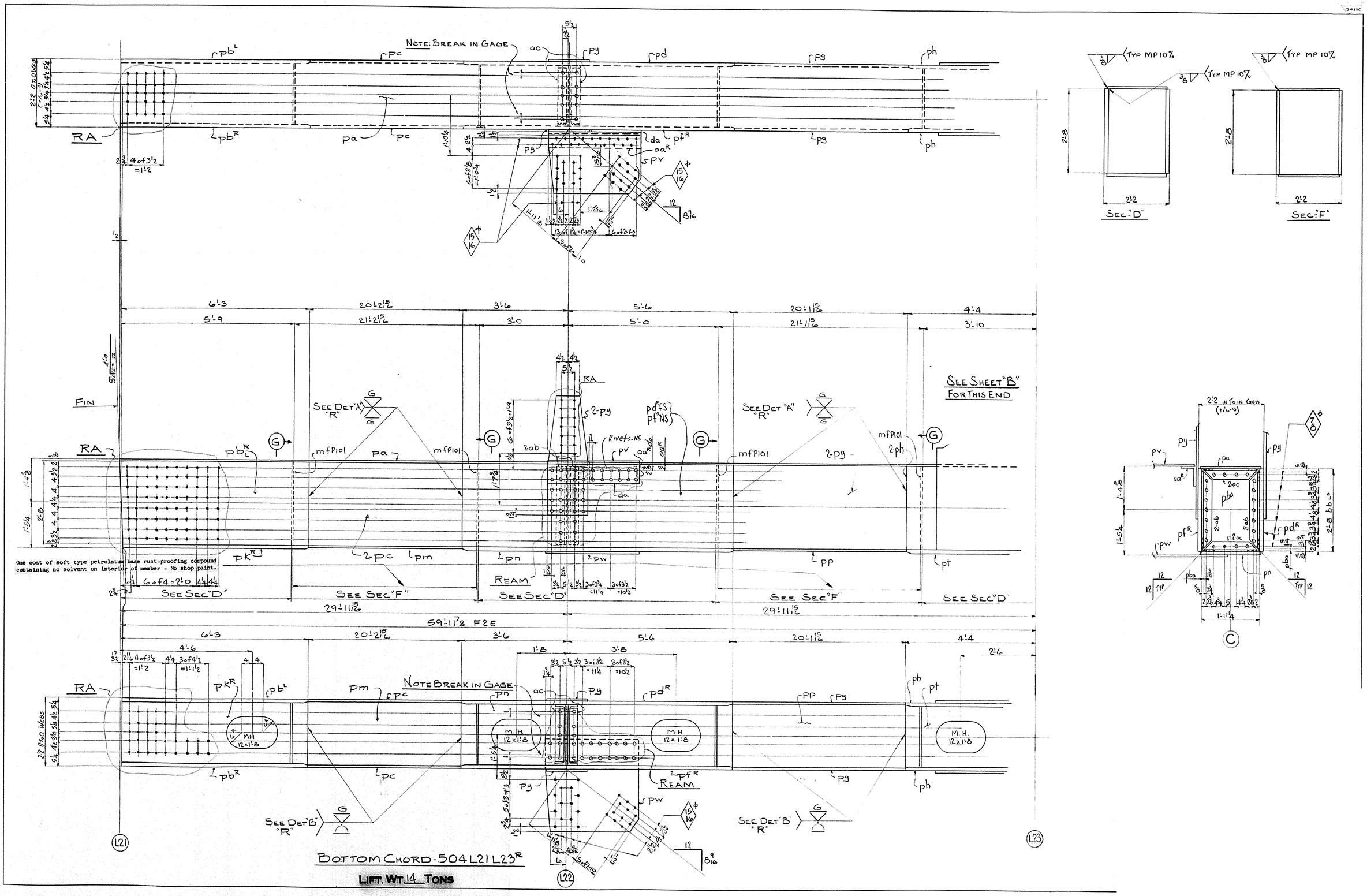

NOTE: BREAK IN GAGE
RA
FIN
SEE SHEET "B" FOR THIS END
SEE DET "A" "R"
SEE DET "B" "R"
SEE SEC "D"
SEE SEC "F"
REAM
One coat of soft type petrolatum base rust-proofing compound containing no solvent on interior of member - No shop paint.
59'-11 7/8 F2E
29'-11 15/16
M.H. 12x1'-8
TYP MP 10%
SEC "D"
SEC "F"
BOTTOM CHORD-504L21L23R
LIFT. WT. 14 TONS

ZENITH, A. & B. SMITH CO., PGH., PA. J-1103-564

B-8XC

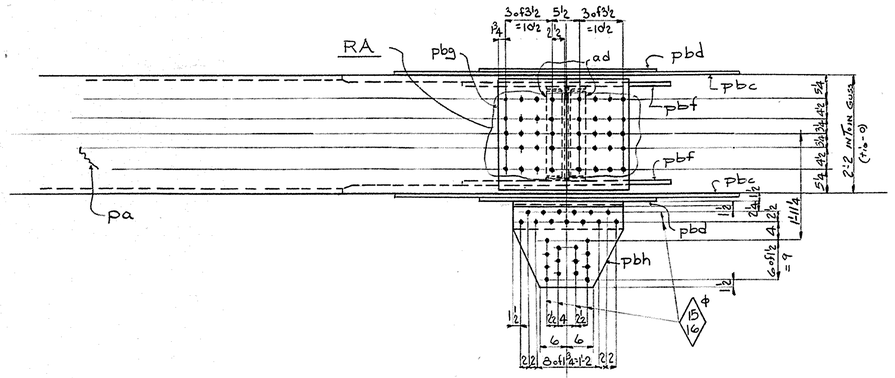

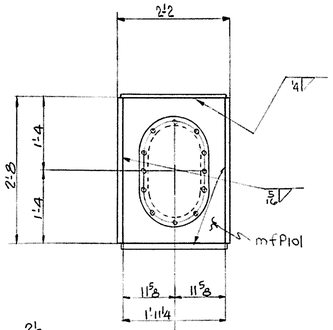

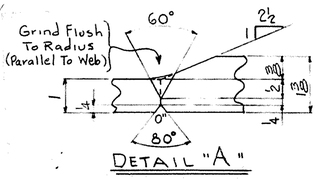

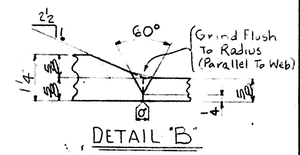

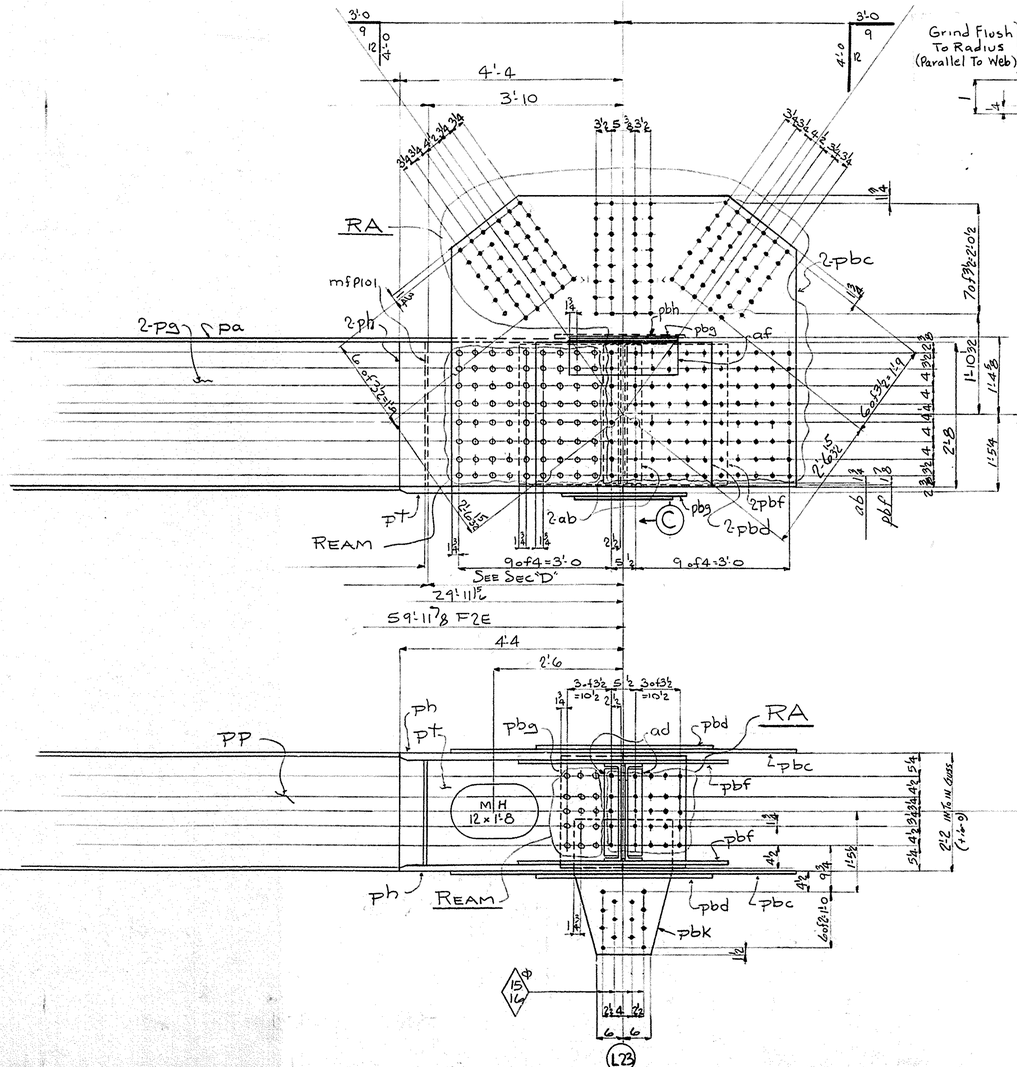

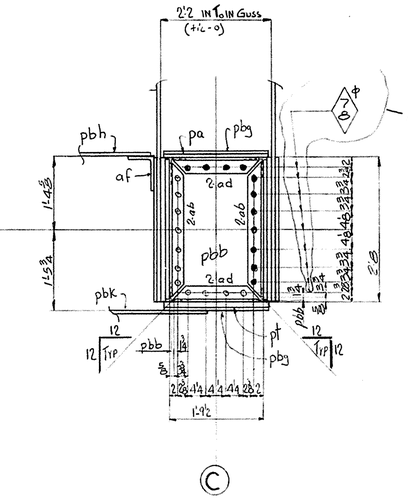

LINE NO.	TOTAL NO. OF PCS. ON ORDER	MATERIAL: NO. OF PCS. ON SKETCH	ABBRV. DESC.	DIMENSIONS	LENGTH FEET	LENGTH INCH	FINISH AND TRIM DESC.	FINISH AND TRIM INCH	SHIPPING OR ASSEMBLING MARK	SHIPPING SPECIFICATIONS OR ASSEMBLING REFERENCE	REMARKS	ORDERED	ITEM	CALCULATED WEIGHT FOR ONE SHIP PIECE
1														
2														
3														
4														
5		1		BOTTOM CHORD					504L21L23	66"×63"				
6		1		BOTTOM CHORD					504L21L23	66"×63"				
7		2	PL	24½ × 5/8		60 0 5/16	B2E		pa		E	5 SPC 60-2	1019	
8		4	PL	32 × 1 3/8		6 3 1/2	B1E F1E		pb1 R		E	65 SPC 18-0 5/16	19179	
9		4	PL	32 × 1		20 15 1/16	B2E		pc		E	5 SPC 20-5 1/4	19172	
10		2	PL	32 × 1 3/8		9 0	B2E		pd1 R		E	65 SPC 20-3 5/8	19183	
11		2	PL	32 × 1 3/8		9 0	B2E		pf1 R		E		(19187	
12		4	PL	32 × 1		20 11 5/16	B2E		pg		E	66 WPS 20-5 1/4	19132	
13		4	PL	32 × 1 3/8		4 4	B1E F1E		ph		E	65 SPC 20-2 3/8	19178	
14		2	PL	24½ × 1 1/4		6 2 1/2	B1E F1E		pk1 R		E	84 SPC 20-0	19185	
15		2	PL	24½ × 5/8		20 21 5/16	B2E		pm		E	50 SPC 20-5 1/4	19171	
16		2	PL	24½ × 1 1/4		9 0	B2E		pn		E	5 SPC 20-0	19185	
17		2	PL	24½ × 5/8		20 11 5/16	B2E		pp		E	50 SPC 20-5 1/4	19171	
18		2	PL	24½ × 1 1/4		4 4	B1E		pt		E	5 SPC 20-0	19185	
19														
20														
21		2	PL	22½ × 3/8		3 1 3/16			pv			84 SPC 30-0	19186	
22		2	PL	35 × 3/8		3 1 3/16			pw				(19186	
23		2	L	8 × 6 × 7/16		3 1 3/16			aa R			40-0	19138	
24		4	PL	16 × 1/2		3 10 3/16			py			84 SPC 30-0	19185	
25		2	FLT	7 3/8 × 1/2		1 9 1/2			da			50 SPC 8-0	19184	
26														
27		2	PL	22½ × 7/16		2 7 1/2			fba			5 SPC 30-0	19184	
28		16	L	4 × 3½ × 3/8		2 6 3/4			ab			40-0	19119	
29		8	L	4 × 3½ × 3/8		1 10			ac				19119	
30		2	PL	21 × 7/16		2 7 1/2			pbb			5 SPC 30-0	19138	
31		8	L	4 × 3½ × 3/8		1 8 1/4			ad			40-0	19118	
32		4	PL	64½ × 7/8		6 9			pbc		A440 Gum F	65 WPS 20-4 1/4	4043	
33		4	PL	32 × 5/8		3 5			pbd		A440 F	65 SPC 36-0	19135	
34		4	PL	31 × 7/8		4 1			pbf		A440 F	65 WPS 32-11 1/4	19190	
35		4	PL	24½ × 1/2		2 6			pbg		A440 F	5 SPC 30-0	19177	
36		2	PL	18½ × 3/8		2 1			pbh			5 SPC 30-0	19136	
37		2	PL	23 × 3/8		2 5 1/2			pbk				(19146	
38		2	L	8 × 6 × 7/16		2 1			of			40-0	19118	
39														
40														
41		8	SB	1 ϕ									5	
42		8	SB	7/8 ϕ									5	
43														
44		8		BULKHEADS					mf P101		DET on P101		X	
45														
46														
47														
48														
49														
50														
51														
52														
53														
54														
55														
56														
57														
58														
59														
60														
61														
62														

BOTTOM CHORD-504L21L23

All holes may be punched full size except holes noted "RA" are to be sub-punched or sub-drilled 1/4" and reamed to size while assembled. [redacted] Holes noted "Ream" are to be sub-punched or sub-drilled 1/4" and reamed. In lieu of sub-punching or sub-drilling and reaming, holes may be drilled full size.

Sheared edges of material noted "E" in the remarks column of the shop bill are to be planed to a depth of 1/4" or be machine flame cut. All A440 steel to be flame sheared

"R" in the tail of a weld symbol denotes radiograph and "MP" Magnetic Particle Inspection.

ALL MATERIAL IS A36 STEEL EXCEPT AS NOTED IN SHOP BILL

HOLES 1 1/16 UN
RIVETS 1 UN

Open Holes are for High Strength Structural Bolts [redacted] NO PAINT within 5" of Holes for High Strength Structural Bolts

X-Ray ☑ Magneti